后倾型辅助臂扁平轮胎拆装机
Tilt-back Tire Changer with Helper

AE1022H/AE1022H-3

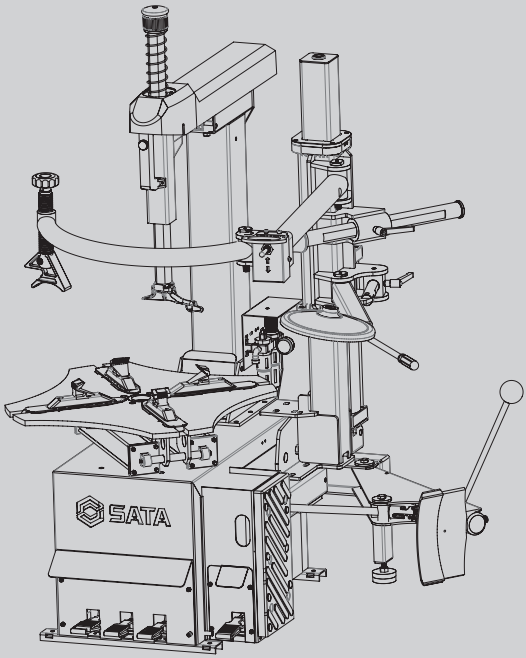

使用说明书 \ User's Manual

中文 EN

目 录

技术参数	外夹轮辋直径	内撑轮辋直径	轮辋宽度	最大轮胎直径	大气缸推拉力
AE1022H	10-20"	12-24"	3"-13"	39"(1010mm)	2100 kgf
AE1022H-3					

技术参数	大盘转速	工作气压	工作噪音	外箱尺寸	毛净重
AE1022H	6.5 rpm	8-10 bar	≦ 70 db	1000*920*1000mm	336/294 Kg
				1150*520*300mm	88/75 Kg
AE1022H-3				1000*920*1000mm	332/290 Kg
				1150*520*300mm	88/75 Kg

开箱后即请检查产品，确保产品完好无损。如果发现有任何部件缺失或损坏，
请电话联系世达汽车科技（上海）有限公司客户服务部：
400-820-3885、800-820-3885。

请记录产品序列号：_____

注：如果产品没有序列号，请记录购买日期。
请妥善保存本使用说明书：
1) 本使用说明书涉及产品的安全警告、安装操作、维护保养、常见故障处理等内容，请妥善保管。
2) 请记录本产品的序列号（或购买日期）在使用说明书首页，并将说明书保存于干燥安全之处以备参阅。
3) 请在完全理解本说明书内容的基础上，正确使用产品。
4) 本产品已经投保产品责任险。

第一章　　安全注意事项

- 不正确的操作可能导致人身伤害及设备损坏。
- 使用前请务必仔细阅读并理解说明书的全部内容。
- 请保证儿童与其他未经许可的人员远离工作区域。
- 确保设备连接到正确的电源和气源，并可靠接地。
- 请在平整、水平、干燥并能可靠承载的平面上使用本设备。
- 避免意外启动，在维修之前请确保设备已关闭，电气源断开。
- 将保护装置和安全装置保持在正确的位置，并保持正常工作。
- 保持工作区域清洁和良好的照明，混乱或黑暗区域会引发事故
- 严禁超载使用本产品，否则引起的事故责任不在保险范围之列。
- 请保持远离热源与火源，高温可能对本设备和密封元件造成损坏。
- 避免危险的环境，不要在潮湿的环境使用设备，或将其暴露在雨中。
- 严禁任何未经培训的人员使用本设备，且不得自行拆装或改装本设备。
- 确保车轮正确安装，按不同轮毂选择正确的方式将其锁紧固定在本设备上。
- 每次使用前都要仔细检查，如有漏油、零部件、附件松动或者损坏，都不能使用。
- 请让具有专业维修资质的专业人员合理维护设备，如需更换配件请使用原厂配件。
- 在操作时必须穿戴符合国家相关安全防护安全规定的安全鞋、防护眼镜和工作手套，推荐选用世达相关产品。
- 严禁在酒后、精神乏力、注意力不集中，受药物影响而困倦以及任何意识不清醒的情况下使用设备。

警告

本手册中所包含的注意、警告、指示等信息不能涵盖所有可能发生的情况。操作人员必须明白日常谨慎操作和具备专业知识是在操作本产品时不可或缺的因素。

1.1 警告标贴

操作中手要 远离轮胎	操作时须佩戴 好防护用品	使用前请仔细 阅读说明书

小心触电！

注意：压胎时请勿用手接触轮胎侧壁

切勿将身体任何部位探入拆装头下方

夹紧轮辋时，请注意手和其他部位勿进入卡爪与轮辋间

压胎时，请勿站立于铲刀和轮胎中间，以免受伤

小心立柱后仰伤人

1.2 安全标识位置示意图

注意保持安全标识的完整，模糊或丢失时，应立即更换新标识应使操作者清楚看见安全标识并须明确标识正确含义

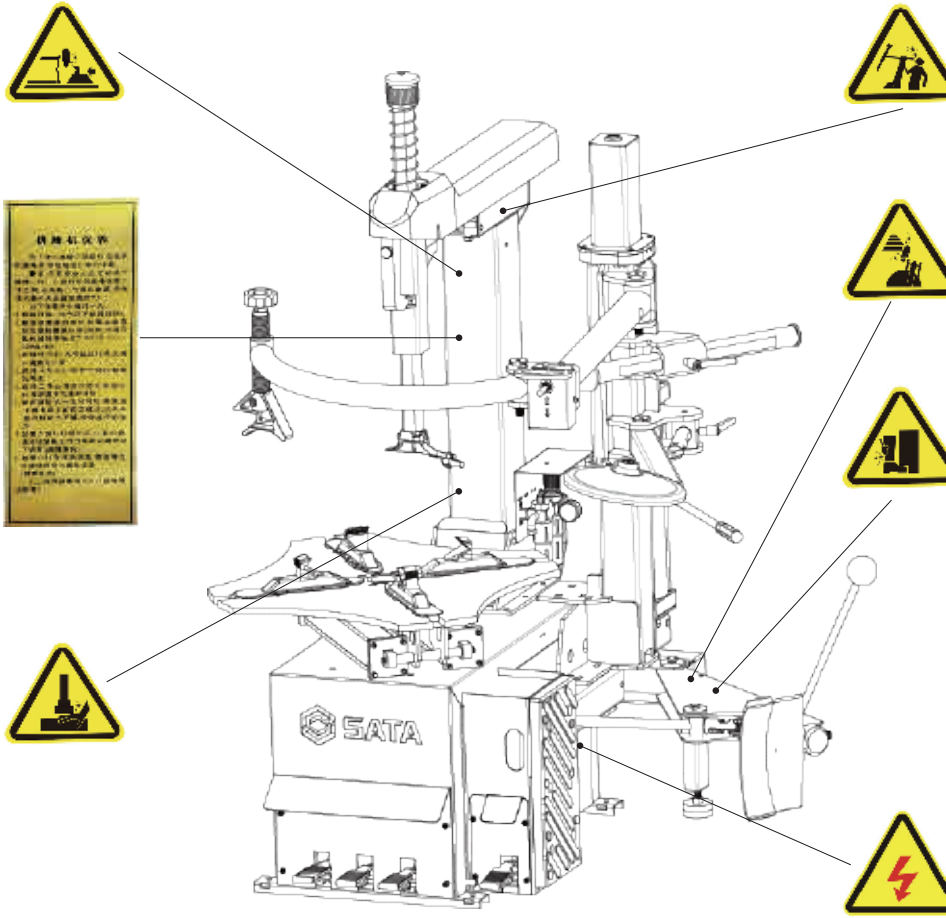

第二章　　安装说明

拆胎机的安装必须由专业人员完成。安全和有效的使用取决于正确的安装。
如果有问题请联系世达授权的经销商。

2.1 设备尺寸和使用空间

- 拆胎机必须放置在坚固的平面地板上，并使用螺栓固定。
- 安装拆胎机的位置，附近必须有电源和气源，一起连接。
- 适合放置拆胎机的位置，须在拆胎机周围留有足够的操作空间。
- 确保所选的位置上面和后面有足够的空间让辅助臂或倒臂正常工作
- 拆胎机右侧和正面至少留 500mm 的操作空间，以便拆装轮胎以及压胎工作。

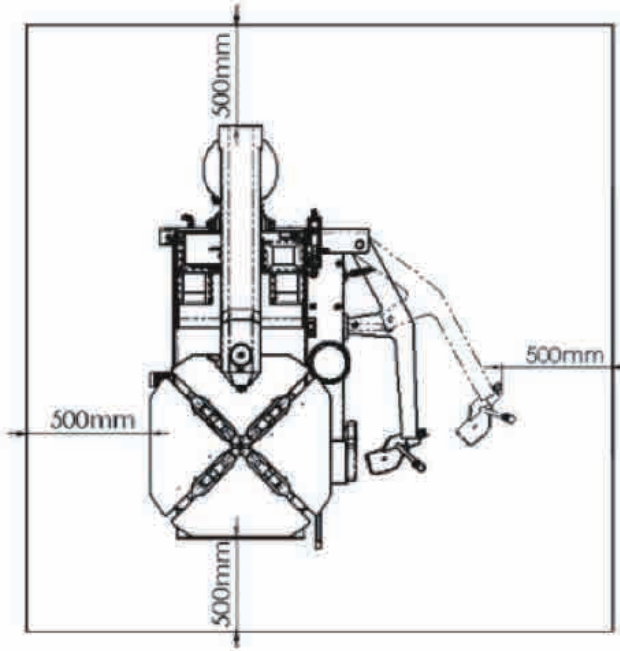

AE1022H/AE1022H-3

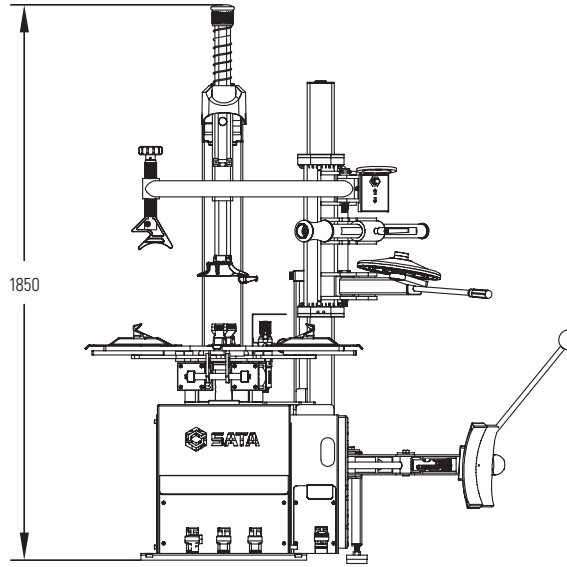

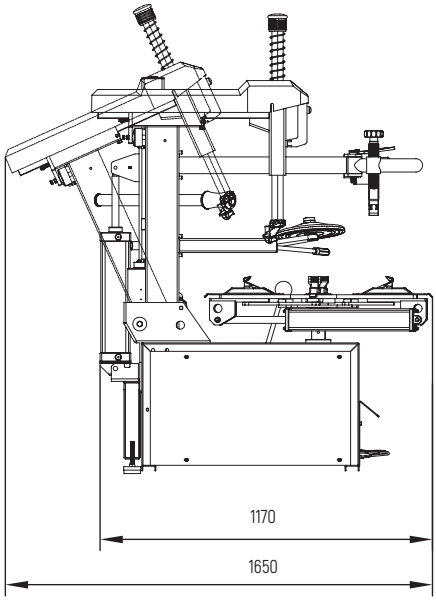

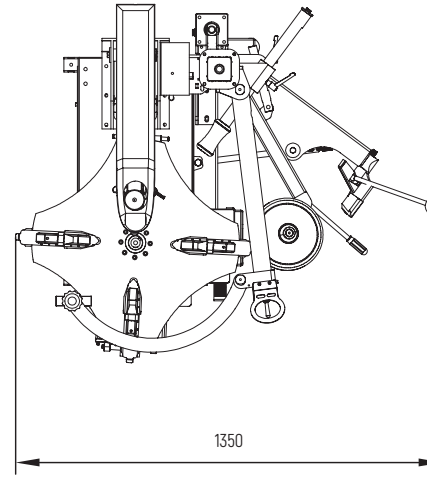

2.2 安全规则

- 本设备应由专业人员或经培训过的人员操作。
- 未经许可对设备（尤其是电气部分）进行动，本公司概不负责。
- 任何对电气部分的处理，只能由专业人员进行。

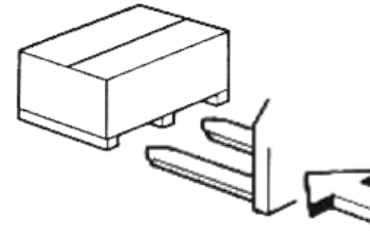

2.3 运输 / 拆箱

- 叉车搬运，搬动位置如右图所示。
- 拆去包装，检查设备是否受损。
- 将包装材料远离儿童放置，以免造成危险。

注意

设备表面都涂有一层特殊的防锈油，易沾上灰尘，必要时应尽量擦除。

2.4 产品图

1. 转动脚踏
2. 压胎脚踏
3. 夹紧脚踏
4. 倒臂脚踏
5. 工作台
6. 卡爪
7. 立柱
8. 拆装头
9. 滑臂
10. 控制把手
11. 六角压杆
12. 辅助臂总成
13. 油雾器
14. 压胎铲臂
15. 压胎胶垫

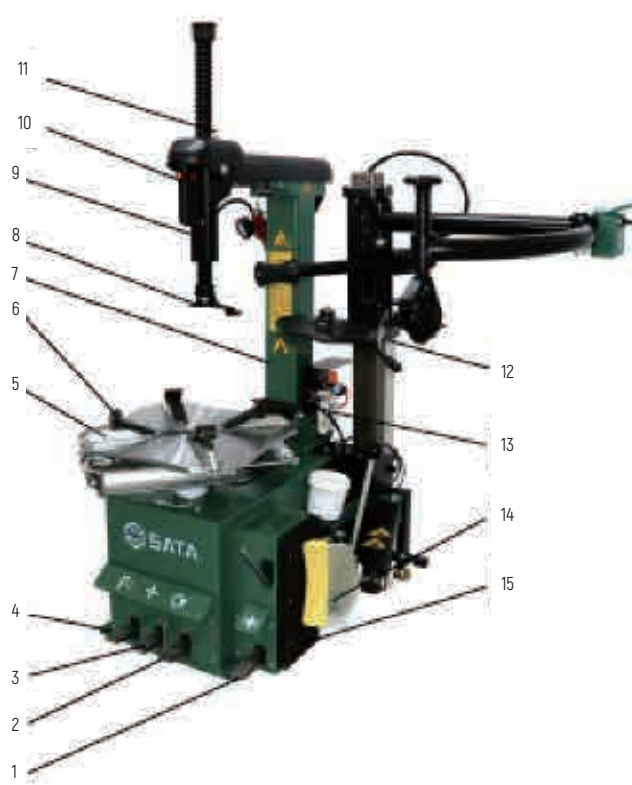

2.5 标准配件：


打气表

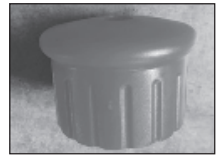
六角杆压簧帽


六角杆压簧


20 寸撬棍


拆装头填充垫 - 前 / 后


撬棍护套


立柱挂钩


说明书

2.6 立柱安装


a. 将后倾斜臂座上的立柱转轴卸下待装


b. 将立柱上的气管穿过后倾斜臂座上的方槽中

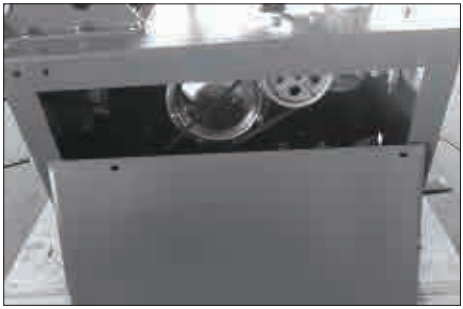

c. 卸下机箱左侧面板的四个固定螺丝，将左侧面板取下

d. 将立柱上的气管与“8 转 6”接头相连，重新安装侧板

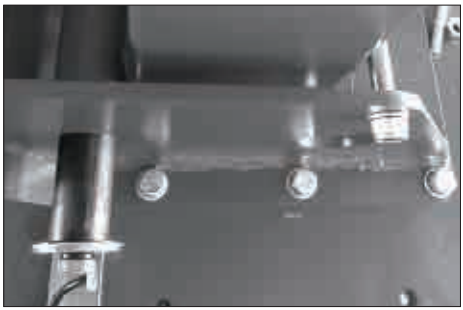

e. 将立柱转轴插入立柱中，用螺柱和垫圈固定

f. 将气缸杆用螺栓与立柱连接

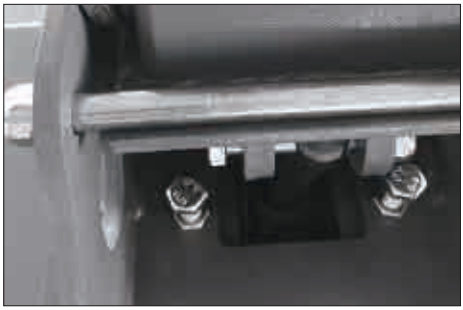

g. 调节立柱两侧的定位螺丝

h. 安装立柱保护罩

2.7 电源连接

通电前应先检查网路电压是否与设备标签上所标的电压值一致

非常重要：设备与电气系统相连接，该电气系统要配有线路保险，良好的接地要符合当地国家标准，必要时给设备配备漏电保护装置，以确保设备的安全运行。

2.8 气源连接

1) 将夹紧脚踏踩下，确定大盘卡爪不会突然张开。

2) 用快速接头将气源连接置油水分离器。并调节压力表显示气压。

3) 将打气表用管线连接至气源，并按压手柄确认充气功能正常。

2.9 整机测试

1) 踩下转动踏脚，大盘按顺时针方向转动。顶起踏脚，大盘按逆时针方向转动。

2) 踩下夹紧踏脚，四个大盘卡爪张开，再次踩踏脚，卡爪闭合。

3) 踩下压胎夹紧踏脚，靠胎铲进入工作状态，再次踩踏脚，靠胎铲返回原始位置。

4) 踩下倒臂踏脚，立柱 U 后仰，再次踩踏脚，立柱回到工作位置。

5) 按下把手按钮（Y 位置）拆胎臂和推拉臂被锁定，退回把手按钮（Z 位置），解除锁定。

6) 检查是否是每踩下踏脚 3-4 次之后，油水分离器油滴 1 滴，如果不是的话，使用螺丝来进行调节。

说明：对于 380V 的设备型号，如果大盘的转动方向同上述的方向不同的话，则调换 3 相接线柱上的两根相线

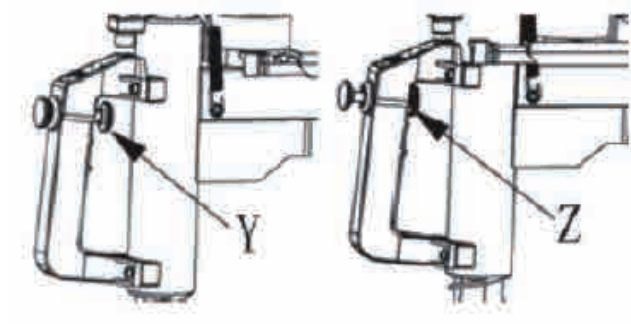

第三章　　操作指南

3.1 在您阅读和理解整个手册和所提供的警告之后才能使用机器。在进行操作之前，放掉胎中的空气，并除去轮上的所有的铅块。轮胎拆装机的操作包括以下部分：a）靠胎 b）拆 胎 c）装胎

3.2 建议拆胎机配压力调节装置。

3.3 靠胎

- 在靠胎操作时要极度的小心。当靠胎踏脚驱动靠胎臂快速而有力的移动的时候，靠胎臂会对其移动的区域内的一切事物造成危险和压碎。
- 检查轮胎是否放气，如果没有的话，排空胎内空气。彻底合上大盘夹爪
- 靠胎时如果夹爪位于开放的位置，那对操作者的手将会是极其危险的。靠胎过程中千万不要使您的手同胎壁相接触。

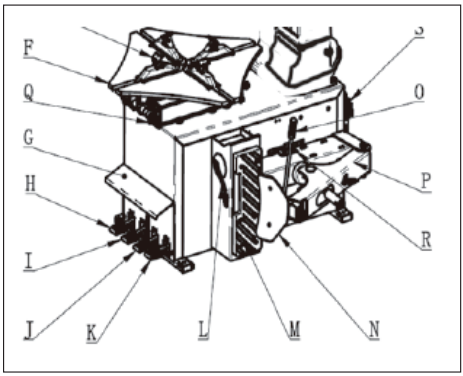

- 将车轮靠在拆胎机箱体右侧的靠胎胶皮上。将靠 胎铲顶在距离轮辋大约 1cm 距离的胎口上。注意靠胎铲要顶在轮胎上而不是顶在轮辋上。

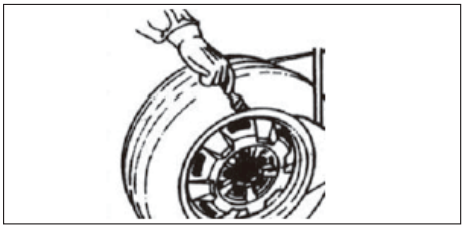

- 踩下踏脚，移动靠胎铲，当靠胎铲达到其行程的尽头的时候或破开胎口的时候，松开踏脚轻轻的旋转轮胎直至轮胎彻底的从轮辋上拆胎

3.4 拆胎

- 在操作之前要确保原有的所有的铅块被卸下，并检查轮胎的放气
- 立柱后仰的时候，确保没有人在拆胎机的后面
- 踩踏脚使立柱倾斜，以便于清洁大盘
- 将润滑脂（或类似的润滑脂）涂抹在胎口上不使用润滑脂将会导致对胎口的严重的损坏
- 在锁定轮辋的过程中，千万不要将您的手放在轮胎的下面。正确的固定操作是轮胎恰恰位于大盘的中央

3.5 外部撑夹

参照大盘上的将夹爪位置，进行放置轮胎，向下踩踏脚至中间位置将轮胎置于夹爪之上并向下压轮辋，踩踏脚（图 5-1 I）到极限位置。

3.6 内部撑夹

- 参照夹爪位置进行轮胎定位，使其彻底闭合将轮胎置于夹爪之上并向下压轮辋，踩踏脚使夹爪张开以夹住轮辋
- 确保轮辋被牢牢的固定在夹爪上
- 千万不要将您的手放在车轮的上面。立柱回位到工作位置会对操作者的手造成挤伤，使其夹在轮胎和轮辋之间
- 踩踏脚翻转立柱使锁紧按钮位于位置，解除拆胎臂 M 的锁定，将拆胎臂向下移动，使鸟头位于轮辋上部。将锁紧按钮置于位置，将整个拆胎总成锁定。这种锁定是水平和垂直两个方向上的锁定，拆胎头距离轮辋 2mm。将撬棍插在胎口和鸟头之间，使胎口在鸟头的上方移动
- 为避免损坏内胎，需使阀门位于拆胎头右侧，距离为 10cm
- 项链、手镯、宽松的衣物或移动部件附近的异物均会危及操作者

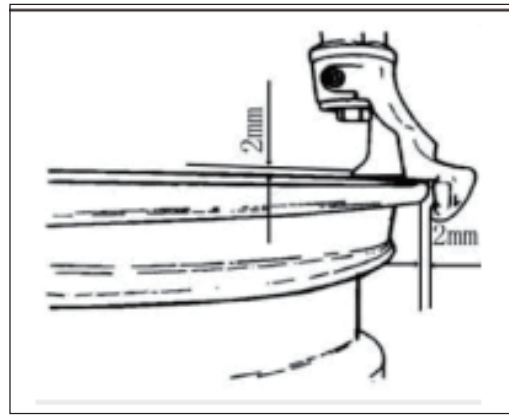

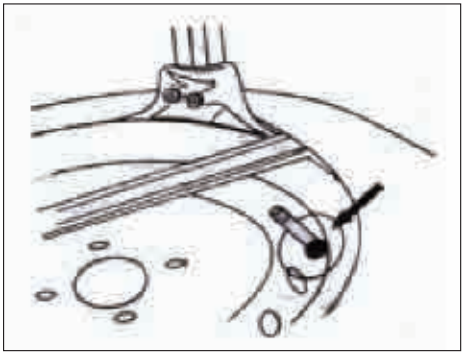

- 用撬棍将胎唇撬到拆装头头部的凸起部位上，点踩转盘转向踏脚（图 5-1 K）转盘顺时针旋转，直到上胎唇全部拆出。如果拆有内胎的轮胎，为了避免损坏内胎，在进行操作时，应使气门离开 拆胎头右边 10cm 左右；

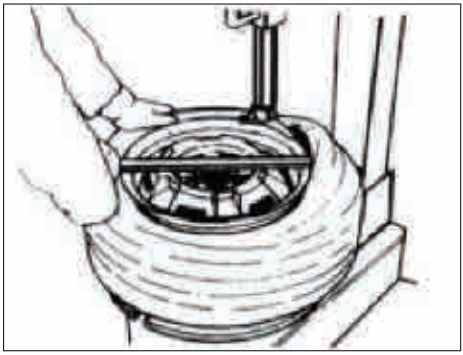

- 为了拆卸内胎，踩下踏脚使立柱倾斜，不解除拆胎臂的锁紧；重复此操作，破开另一侧的胎口。

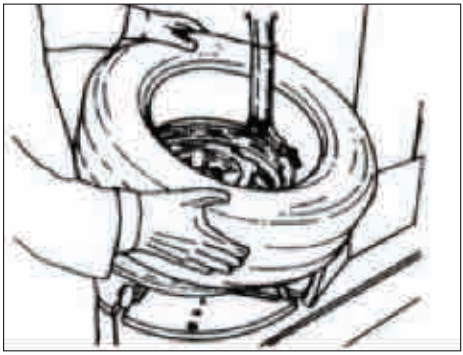

3.7 安装轮胎

- 最重要的是检查轮胎和轮辋，防止再充气过程中的爆炸。在开始安装操作之前要确保： 轮胎和胎纹纤维没有受到损坏，如发现，不要安装轮胎；轮辋没有凹痕和翘曲肉眼观察， 注意铝合金轮辋的内侧没有微小的划痕，这些是危险的，尤其是在充气的时候
- 使用专用的润滑脂进行胎口的润滑，以避免损坏胎口和便于操作 在轮辋锁定的时候，不要将手放在轮胎的下面。正确的操作是使轮胎位于大盘的中央 立柱倾斜的过程中要确保没有人站在立柱的后面
- 如果所拆装的轮辋的尺寸相同的话，就没有必要经常地锁紧拆胎臂或解除拆胎臂的锁紧， 您所需要做的仅仅是将立柱后仰或恢复到工作的位置，拆胎臂保持在工作的位置
- 千万不要将您的手放在车轮的上面。立柱回位到工作位置会对操作者的手造成挤伤，使 其夹在轮胎和轮辋之间
- 移动轮胎使胎口在鸟头前端下方经过，胎口翘起的部分顶在鸟头后部用手将胎口按进轮 辋的槽内。踩踏脚使得大盘按照顺时针旋转。持续此操作，直至轮胎完全装入轮辋。
- 为防止工业事故，在大盘转动的时候使手和身体的其他的部分尽可能的远离拆胎臂放入 内胎，重复上述的操作
- 拆装轮胎的时候，大盘要按照顺时针的方向转动。逆时针的转动仅在机器熄火导致操作 者发生错误的时候为了纠错而使用

第四章　　辅助臂的安装与操作

4.1 辅助臂的尺寸和使用空间

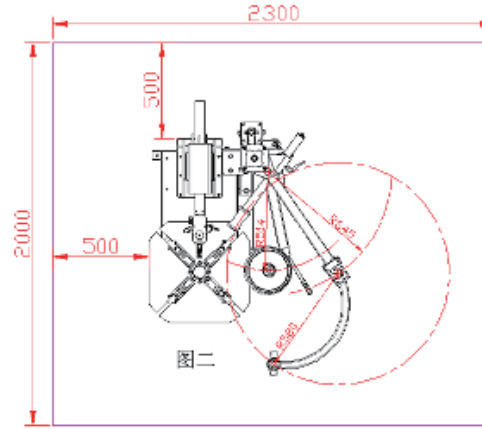

4.2 各组成部件

1. 立柱
2. 升降滑座
3. 滚轮滑杆（固定压胎臂）
4. 升降气缸
5. 支撑地脚
6. 托胎臂
7. 托胎盘
8. 圆横臂（旋转压胎横臂）
9. 压胎丝杆
10. 控制阀

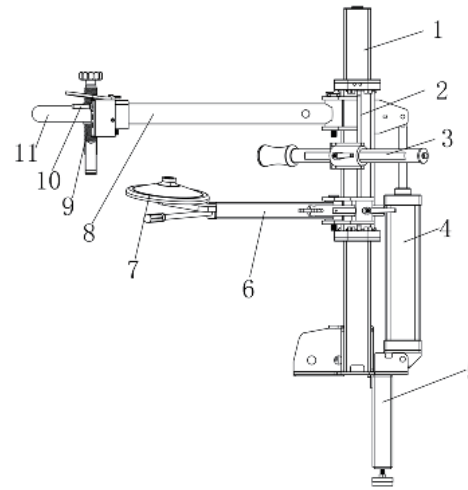

4.3 安装

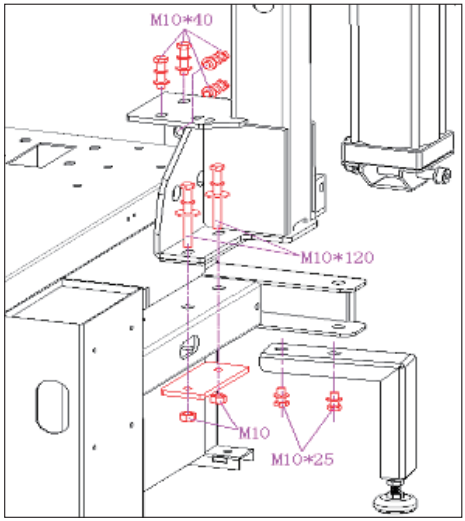

1) 将辅助臂用 4 个外六角圆柱头螺栓 M10*40、2 个外六角圆柱头螺栓 M10*120、2 个 M10 自锁螺母固定在机箱相应的孔位上，用外六角圆柱头螺栓 M10*25 连接支撑脚到立柱导 轨上。

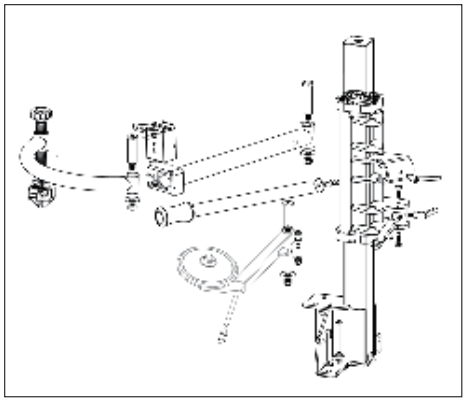

2) 将旋转压胎臂，固定压胎臂和托胎臂安装与滑套组件上，再插上相对应的气管。

4.4 操作说明

控制手柄用于控制压胎块与压胎轮的上升和下降，以适应装拆轮胎的高度。

4.5 压胎铲安装

1. 取出压胎铲，卸下压胎铲轴上的垫片与锁紧螺母

2. 将压胎铲轴穿入铲臂转轴中

3. 装上垫片与锁紧螺母，用扳手锁紧

第五章　　存储

当设备需长时间贮存时，请断开电源和气源。润滑所有需润滑的部件：滑块、大盘上的滑块槽，辅助臂安装处。排空所有的油 / 液体存贮器。将设备套上塑料罩以防尘。

第六章　　报废

当设备寿命已尽，不能再使用时，请按照当地有关法规妥善处理。

第七章　　日常保养

为了延长机器使用寿命，应按说明书要求定期进行维护保养。否则，机器的运行可靠性将受影响，致使操作者和机器附近人员可能受到伤害。警示：在进行任何维修保养工作之前，必须断开气源和电源，并且踩 3-4 下踏板排完机器内的余留压缩空气。损坏部件必须由专业维修人员用原厂提供的备件更换。

1) 保持卡爪及压胎铲气缸控制阀的清洁。

2) 使用机器 20 天后，重新紧固卡盘卡爪上的固定螺钉（A）。

3) 如果爪盘的转动力不够，按以下检查皮带的张力。松开机身左面侧板的螺钉，拆下侧板，调整安装电动机的两颗调节螺钉，使调节支架和电机座的距离合适，然后紧固螺钉，以达到张紧 驱动皮带的作用。

4) 为了卡爪及压胎铲大气缸的开 / 合可靠，应保持与其相连的控制 阀的清洁，可按以下说明进行维护。卸除机身左侧板的 4 颗螺钉，拆下侧板；松开卡爪开 / 合或大气缸控制踏板上的阀体消声器。

5) 用压缩空气清洁消声器上的污物，若已损坏，参见备件表更换。

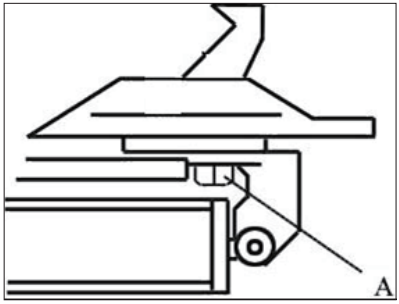

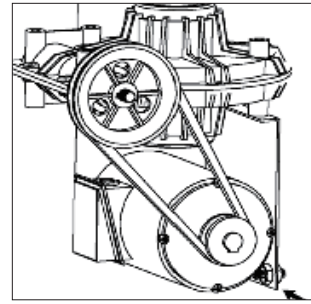

6) 气压不超过 10 Ba。

7) 保持工作台清洁以防止灰尘积存，并润滑卡爪座和导轨。

8) 如果摆臂没有锁定或没有达到工作所需的尺寸，需要对摆臂锁紧板进行调节。

9) 如果立柱有摆动现象，需要将立柱转轴两旁的螺丝锁紧。

10) 检查油雾器油缸的油位，如需加油，用内六角扳手松开螺钉，或逆时针拧开油缸进行加油，只能使牌号 VG32 润滑油，在接上压缩空气的情况下，第一次踩 1 下踏板，看油雾器是 否滴第一滴油，连续使用时，踩一下踏板，看油雾器是否滴一滴油。

拔出盖子，旋转可调节压力，压力设定范围为8-10Bar

压下盖子，锁定压力

定时检查汽水分离器水位高度，请勿超过分离器50%高度，必要时可转动锁紧钮，人工排水。

每天检查润滑油液位，需要时可打开油盖添加。注意，禁止使用长期暴露于空气中的润滑油。

每天检查润滑状况，确保踩压踏脚时润滑油滴入油雾器中。需要时可使用螺丝刀调整油雾器调节螺丝。

第八章　　故障以及排除

8.1 工作盘不动

检修思路：首先分清是电路故障还是机械故障。

检修方法：

- 踩下或提起倒顺开关脚踏，观察电机的反应，如果没有任何反应，用万用表测量倒顺开关，接线端之间电压是否正常，不正常检查供电线路或电源插头，若电压正常，用万用表测量倒开关接线端和接线端在踩下和提起电源开关脚踏时，电压是否正常，如果不正常，倒顺 开关坏，如果正常，电机或电容坏。
- 如果电机有嗡嗡声，但不能转，测量方法同上面。如果测量结果不正常，倒顺开头坏，如果正常，用手转动变速箱带轮，如果用手转不动，变速箱有故障，如果用手能转动，是电 机或电容故障。
- 如果电机能正常转动，工作圆盘不转动，应是变速箱故障，如：变速箱皮带轮没带动蜗杆旋转：蜗轮崩出等。

8.2 拆胎无力

检修方法：拆胎时观察电机的工作情况，如果拆胎时，不能转动，说明电机力矩太小或 电容有故障，如果电机能转动，但皮带轮在打滑说明是皮带过松所致，只需调紧皮带即可。

8.3 卡爪卡不死钢圈

检修方法：检查供气气压是否符合说明书的要求，如果符合要求，检查漏气或窜气，如果没有漏气和窜气和窜气现象就是卡爪同心高不好。

8.4 大气缸不能压胎

检修思路：如果是压胎无力（包括空载时大气缸能活动，压胎时压不松），一般是气压低， 漏气，大气缸窜气，如果空载大气缸不能活动，一般是压缩空气没有加在大气缸的压胎端。

- 检查供气气压是否符合说明书的要求，如果符合要求检查大气缸是否漏气，检查控制大气缸两端的气管，接通气源，五通阀上的两根气管中的一根应该有气出来，当踩下压胎脚踏时，另一根气管应该有气出来，如果不正常，应换五通阀或调整五通阀的安装位置，使之工作正常。
- 检查五通阀正常的话，把复位端的气管接上，在压胎工作端的接咀上没有气出来为正常，如果有气出来，说明大气缸活塞裂或是密封圈磨损。
- 检查气压：用气压表检查油雾器的进气端的气压是否符合说明书的要求，如果进气端气压不够，调大空压机供气，如果进气端气压符合要求，出气端气压不够，调节油雾器的调压旋钮，如果调节调压旋钮不起作用，更换油雾器。

8.5 拆胎头刮钢圈吃胎：

- 六方柱销锁不紧
- 拆装头螺丝松动或方向位置不对
- 六方柱与六方套间隙大

检修方法：

- 拆装头螺丝松动的调整：先预装紧（不要太紧）螺丝，再装紧螺丝，在装紧螺丝的时候，应装上一个中等尺寸的轮胎，让拆胎头滚轮靠在钢圈上，转动拆胎头的方向使之与钢圈 的弧度相吻合，再紧固，最后把拧紧。
- 如果用手扳动六方柱，摆动比较大的话，更换摇臂。

8.6 卡爪张不开或收不拢：

检查不无漏气，检进五通阀芯是否跳出脚踏拔叉外，若以上正常，检查旋转配报导阀不无窜气，拆下旋转配报导阀连到小气缸的气管，在脚踏没有踩下或者说完全踩下时，旋转配气阀连到小气缸的气管只有其中一根有气出来，任何情况下两根气管不同时出气的现象就是旋转配气阀窜气，如果以上部件都没问题，检查扒械部分，卡爪座有无变形，卡死，方形转盘有无卡死，方形转盘有无卡死，方形转盘销有无脱落。

8.7 一般常见的故障排除法

故障现象	故障原因	排除方法
拆装头刮轮辋 / 吃胎	立柱松动导致拆装头位移	锁紧立柱
	摇臂 / 滑臂松动导致拆装头位移	调整摇臂 / 滑臂间隙
	六方杆间隙大导致拆装头位移	调整六方杆间隙
	拆装头松动	锁紧拆装头
	拆装头塑料垫片脱落	安装塑料垫片
	拆装头与轮辋间隙过小	调整拆装头与轮辋间隙 2-4mm
卡爪夹不紧轮辋	夹紧气缸漏气 / 窜气	检查气管接头 / 更换密封圈
	旋转配气阀漏气 / 窜气	检查气管接头 / 更换密封圈
	五通位置不对 / 漏气 / 窜气	调节五通阀位置 / 更换 O 型密封圈
	油雾器气压过小	调节油雾器压力 / 检查气源压力
	四个卡爪不同心 / 损坏	调整卡爪距离和偏心轴瓦 / 更换卡爪
大气缸无力	大气缸漏气 / 窜气	检查气管接头 / 更换密封圈
	五通位置不对 / 漏气 / 窜气	调节五通阀位置 / 更换 O 型密封圈
	油雾器气压过小	调节油雾器压力 / 检查气源压力
	气缸进气慢	调节五通阀脚踏限位螺丝
电机无力	220V 电机启动电容损坏	更换电容
	380V 电源缺相	检查电源相位
	皮带松	调紧皮带
电机不转	220V 电机启动电容损坏	更换电容
	380V 电源缺相	检查电源相位
	开关损坏或接线错误	检查开关接线 / 更换开关
	没有电源或插头没接触好	检查电源 / 更换插头
六方杆锁不紧	锁紧板间隙大	调整锁紧板间隙

故障现象	故障原因	排除方法
滑臂间隙大	上下滚轮轴承和侧边顶丝位置不对	调整位置
气缸窜气	活塞密封圈损坏 / 气管接头损坏	更换
气缸漏气	0 型密封圈损坏 / 活塞杆刮伤 / 气管接头损坏	更换
五通阀漏气	0 型密封圈损坏 / 气管接头损坏	更换
五通阀窜气	0 型密封圈损坏	更换
油雾器漏气	型密封圈损坏 / 有异物 / 气管接头损坏	更换 / 清理异物
油雾器不滴油	调节滴油量太少 / 无油	加大滴油量 / 加油
旋转配气阀漏气	0 型密封圈损坏 / 气管接头损坏	更换
旋转配气阀窜气	0 型密封圈损坏	更换
卡爪张开收不拢 / 抖动	有异物 / 无润滑油 / 卡爪座变形	清理异物 / 加油润滑 / 更换
皮带容易损坏	皮带过紧 / 皮带轮与皮带盘不水平 / 过度使用	调整位置与水平 / 更换
开关正反转相反	接错线	重新连接 / 更换
减速箱噪音大	螺丝松动 / 无润滑油 / 轴承损坏	锁紧螺丝 / 加油润滑 / 更换

第九章　　电路和气路图

220V

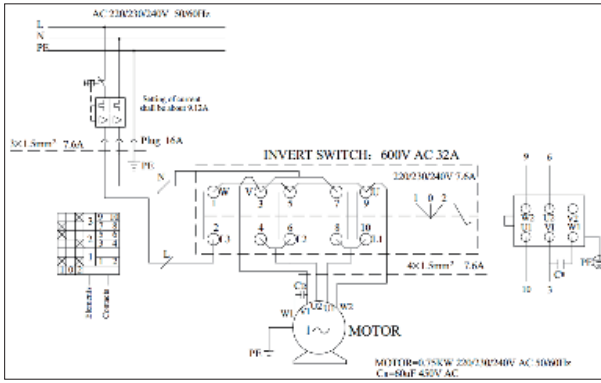

380V

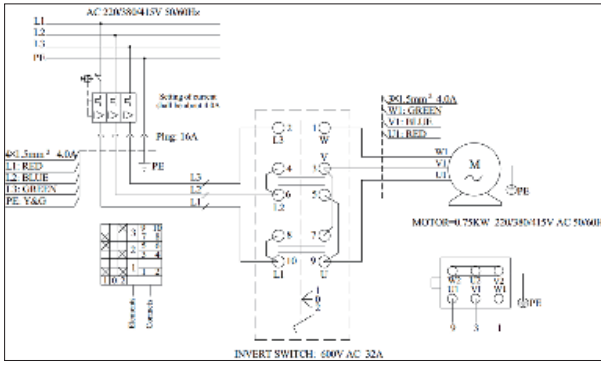

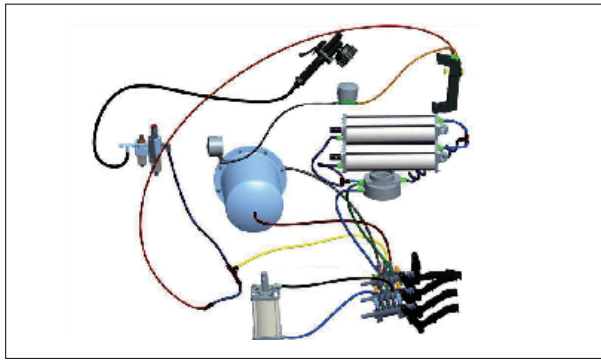

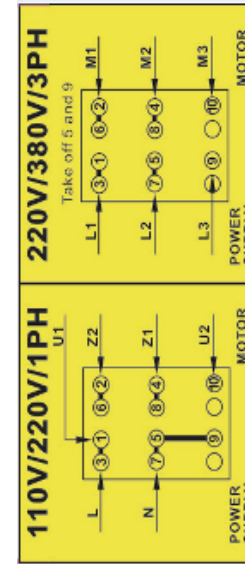

关接线图 220V/380V(99*47.4)

第十章　　产品爆炸图

1 滑臂总成：

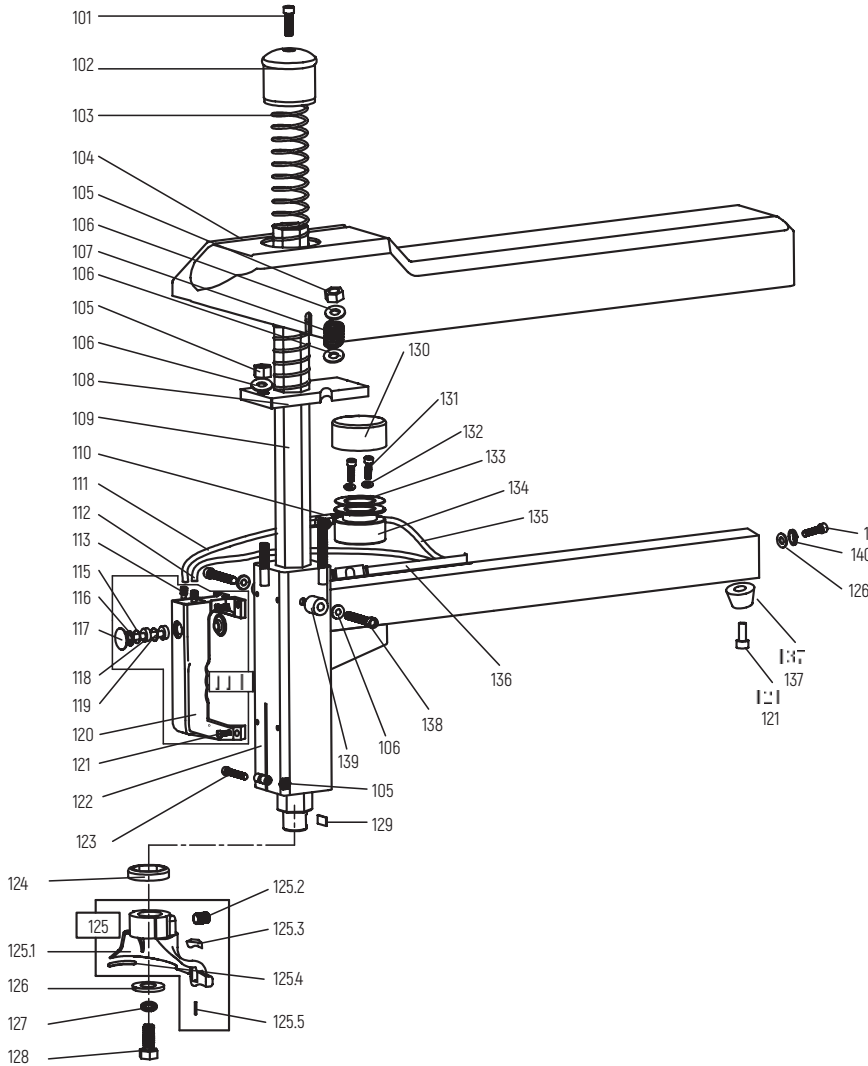

图号	世达编号	规格名称	数量	图号	世达编号	规格名称	数量
101	PAE1022-101	内六角圆柱头螺栓 M8*35	1	124	PAE1021-120	防震垫 S40*50*10	1
102	PAE1021-102	六角压杆帽 S40	1	125	PAE1022-125	拆装头总成	1
103	PAE1021-104	压杆弹簧 Ø3.5*55*600	1	125.1	PAE1022-125A	拆装头	1
104	PAE1022-104	滑臂防护罩	1	125.2	PAE1021-125	内六角凹端紧定螺钉 12*16	4
105	PAE1021-716	自锁螺母 M8	3	125.3	PAE1021-121	拆装头填充垫 - 前	1
106	PAE1021-110	平垫圈 Ø8*24*2	7	125.4	PAE1021-122	拆装头填充垫 -- 后	1
107	PAE1022-107	锁紧弹簧	2	125.5	PAE1021-124	圆柱销 M5*24	1
108	PAE1022-108	六角压杆锁紧板	1	126	PAE1022-126	拆装头平垫圈 Ø10.5*33*8.	1
109	PAE1022-109	六角压杆	1	127	PAE2021-208	弹性垫圈 ф10	1
110	PAE1022-110	快拧三通 1/8-2*Ø6	1	128	PAE1021-109	外六角螺栓 M10*25	1
111	PAE1022-111	气管 Ø6*600	1	129	PAE1021-116	六方锰钢片	1
112	PAE1022-112	气管 Ø6*300	1	130	PAE1022-130	锁紧气缸体	1
113	PAE1022-113	快拧直通 1/8-Ø6	2	131	PAE1022-131	内六角圆柱头螺栓 M6*40	2
114	PAE1022-114	手柄总成	1	132	PAE1022-132	锁紧气缸密封垫 6	2
115	PAE1022-115	控制手柄 O 型密封圈 7.5 x 2.65	4	133	PAE1022-133	锁紧气缸 -V 型密封圈 60*50*6.5	1
116	PAE1022-116	控制手柄 - 阀封盖	1	134	PAE1022-134	锁紧气缸 - 活塞	1
117	PAE1022-117	控制手柄阀杆帽	2	135	PAE1022-135	气管 Ø6*2200	1
118	PAE1022-118	控制手柄 - 隔套	3	136	PAE1022-136	气管导向槽	1
119	PAE1022-119	铝阀杆 ф7.8*55	1	137	PAE1022-137	环保垫脚锥形 32*25*20	2
120	PAE1022-120	控制手柄	1	138	PAE1022-138	内六角圆柱头螺栓 M6*45	2
121	PAE1022-121	内六角圆柱头螺栓 M6*20	5	139	PAE1022-139	防护罩垫圈	2
122	PAE1022-122	滑臂	1	140	PAE1021-113	弹性垫圈 ф8	1
123	PAE1021-118	内六角圆柱头螺栓 M8×40	1	141	PAE1021-108	外六角螺栓 M8*20	1

2 立柱总成：

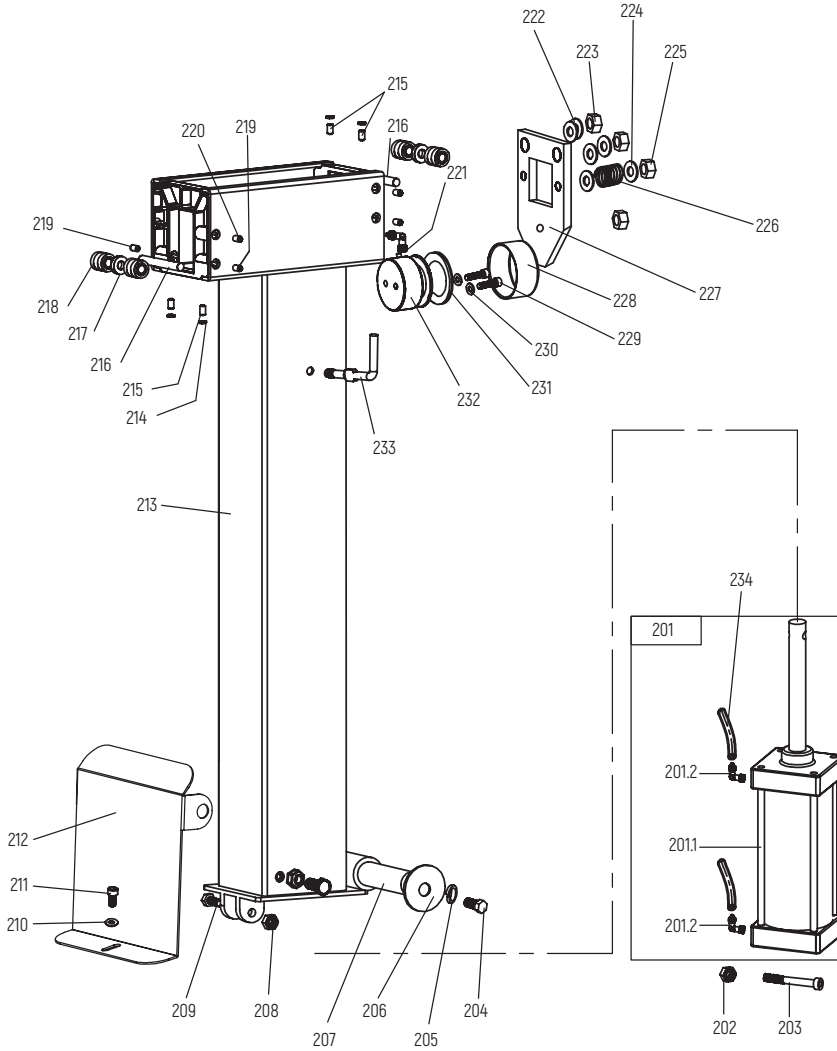
222
224
223
225
215
220
219
216
221
226
219
227
218
228
217
229
230
216
231
215
232
214
233
213
234
201
201.2
212
201.1
211
201.2
210
209
208
206
204
207
205
202
203

图号	世达编号	规格名称	数量
201	PAE1022-201	倒臂气缸总成（带接头）	1
201.1	PAE1022-201A	气缸 80*88（不带缓冲）	1
201.2	PAE1021-324B	带旋转快拧弯头 ф8*5	2
202	PAE1022-202	自锁螺母 M12	1
203	PAE1022-203	内六角圆柱头螺栓 M12*140	1
204	PAE1021-109	外六角螺栓 M10*25	4
205	PAE2021-208	弹性垫圈 Ø10	2
206	PAE1022-206	锁紧垫片	2
207	PAE1022-207	立柱转轴	1
208	PAE1022-208	自锁螺母 M10	1
209	PAE1021-135	外六角螺栓 M10*60	11
210	PAE2021-311	平垫圈 Ø6*12*1.5	1
211	PAE1021-24	内六角圆柱头螺栓 M6*10	1
212	PAE1022-212	倒臂防护罩	1
213	PAE1022-213	立柱	1
214	PAE1022-214	螺母 M10	6
215	PAE1022-215	内六角凹端紧定螺钉 M10*20	4
216	PAE1022-216	轴承钢圆柱销 10*80	1
217	PAE2021-209	平垫圈 ф10*20*2	2
218	PAE1022-218	轴承 6900ZZ	16
219	PAE1022-219	内六角凹端紧定螺钉 M12*20	4
220	PAE1022-220	紫铜头机米螺丝 M10*32	2
221	PAE1022-221	快插弯头 1/8-ф6	1
222	PAE1021-316	平垫圈 Ø12*24*2	1
223	PAE1022-223	自锁螺母 M12	2
224	PAE1021-114	平垫圈 Ø8*17*1.5	4
225	PAE1021-716	自锁螺母 M8	2
226	PAE1022-107	锁紧弹簧	2
227	PAE1022-227	滑臂锁紧板	1
228	PAE1022-130	锁紧气缸体	1
229	PAE1022-131	内六角圆柱头螺栓 M6*40	2
230	PAE1022-132	锁紧气缸密封垫 6	2
231	PAE1022-133	锁紧气缸 -V 型密封圈 60*50*6.5	1
232	PAE1022-134	锁紧气缸 - 活塞	1
233	PAE1021-133	立柱挂钩	1
234	PAE1021-520F	气管 Φ8*1000mm	2

3 工作台总成：

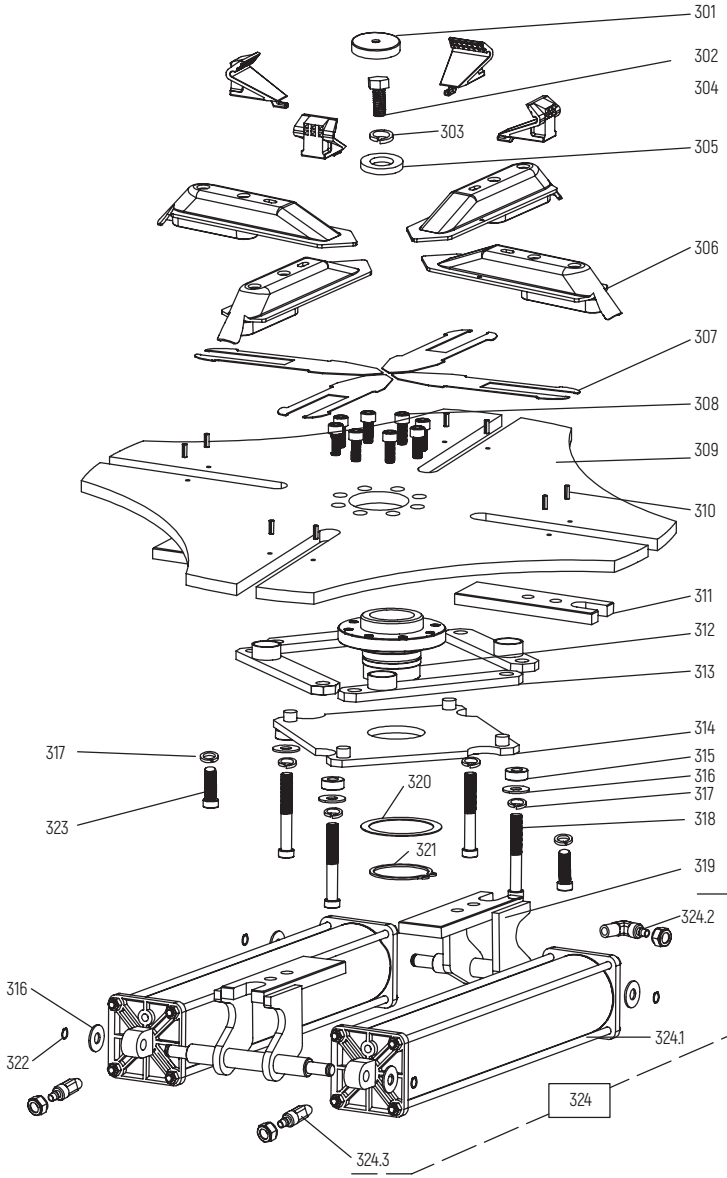
301
302
304
303
305
306
307
308
309
310
311
312
313
314
315
316
317
318
319
320
321
322
323
324
324.1
324.2
324.3

图号	世达编号	规格名称	数量
301	PAE1021-301	工作平台封盖	1
302	PAE1021-302	外六角螺栓 M16*40	1
303	PAE1021-303	弹性垫圈 ф16	1
304	PAE1021-304	卡爪	4
305	PAE1021-131	工作台大垫圈	1
306	PAE1021-306	卡爪座帽组件	4
307	PAE1021-307	导向片	4
308	PAE1021-308	内六角圆柱头螺栓 M8*20	8
309	PAE1021-309	工作台板	1
310	PAE1021-310	弹性销 5*16	8
311	PAE1021-311	座下板	4
312	PAE1021-312	工作台锥套	1
313	PAE1021-313	拉条组件	4
314	PAE1021-314	方形转盘组件	1
315	PAE1021-315	拉杆条销套	4
316	PAE1021-316	平垫圈 ф12*24*2	8
317	PAE1021-317	弹性垫圈 ф12	8
318	PAE1021-318	外六角螺栓 12*80	4
319	PAE1021-319	B 型卡爪座总成	1
320	PAE1021-320	方形转盘垫片	1
321	PAE1021-321	轴用卡簧 ф65	1
322	PAE1021-322	轴用卡簧 ф12	4
323	PAE1021-323	外六角螺栓 M12*35	4
324	PAE1021-324	夹紧气缸总成 75*315	2
324.1	PAE1021-324A	气缸 75*315	2
324.2	PAE1021-324B	快拧弯头 1/8-ф8*5	2
324.3	PAE1021-324C	快拧直通 1/8-ф8*5	2

4 箱体总成：

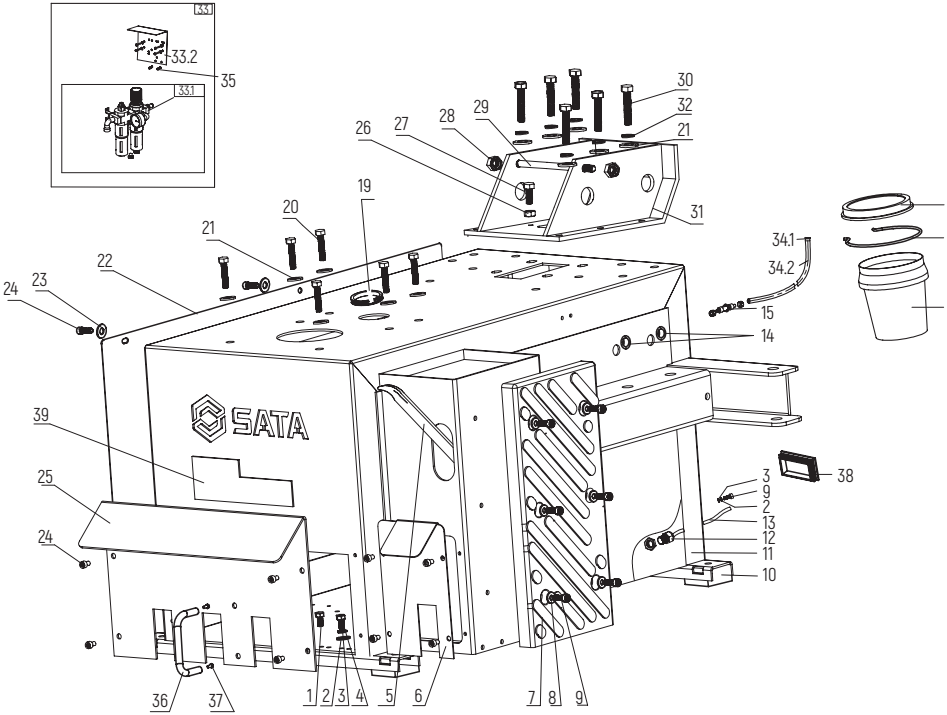
33.1
33.2
35
33.1
30
32
21
29
28
27
26
31
19
20
21
22
23
24
18
17
34.1
34.2
16
15
14
39
25
24
3
9
2
13
12
11
10
38
36
37
1
2
3
4
5
6
7
8
9

图号	世达编号	规格名称	数量	图号	世达编号	规格名称	数量
1	PAE1021-108	外六角螺栓 M8*202	2	22	PAE1021-22	左侧板	1
2	PAE1021-113	弹性垫圈 ф82	2	23	PAE2021-311	平垫圈 ф6*12*1.5	2
3	PAE1021-110	平垫圈 ф8*24*2	2	24	PAE1021-24	内六角圆柱头螺栓 M6*10	12
4	PAE1021-109	外六角螺栓 M8*16	1	25	PAE1022-25	前盖	1
5	PAE1021-5	撬杆 20″	1	26	PAE1021-512	螺母 M10	2
6	PAE1022-6	单脚踏前盖板	1	27	PAE1022-27	外六角螺栓 M10*40	2
7	PAE1021-7	压胎胶板	1	28	PAE1022-208	自锁螺母 M10	2
8	PAE1021-114	平垫圈 ф8*17*1.5	6	29	PAE1022-29	调节螺杆	1
9	PAE1021-308	内六角圆柱头螺栓 M8*20	9	30	PAE1021-135	外六角螺栓 M10*60	6
10	PAE1021-10	橡胶脚垫	4	31	PAE1022-31	倒臂支座	1
11	PAE1022-11	机箱	1	32	PAE2021-208	弹性垫圈 ф10	6
12	PAE1021-12	电缆螺丝 G13.5	1	33	PAE1021-33	油雾器总成（带支架）	1
13	PAE1021-13	带插头电源线 3m	1	33.1	PAE1021-33A	油雾器总成（不带支架）	1
14	PAE1021-14	护线圈 ф16	2	34.1	PAE1021-34A	快速母头 SP20-T	1
15	PAE1021-15	快拧隔板直通 2*8*5	1	34.2	PAE1021-34B	弹簧管 8*5-5	1
16	PAE1021-16	圆形油桶	1	35	PAE2021-405	内六角圆柱头螺栓 M6*16	2
17	PAE1021-17	油盒架	1	36	PAE1021-35	圆钢 U 型拉手	1
18	PAE1021-18	圆形油盒盖	1	37	PAE2021-118	十字槽半圆头带垫螺钉 M4*10	2
19	PAE1021-19	护线圈 ф45	1	38	PAE1021-37	塑料方塞 60*100	1
20	PAE1021-20	外六角螺栓 M10*160	6	39	PAE2021-115	LOGO 背板	1
21	PAE2021-209	平垫圈 ф10*20*2	12				

5 大气缸总成：

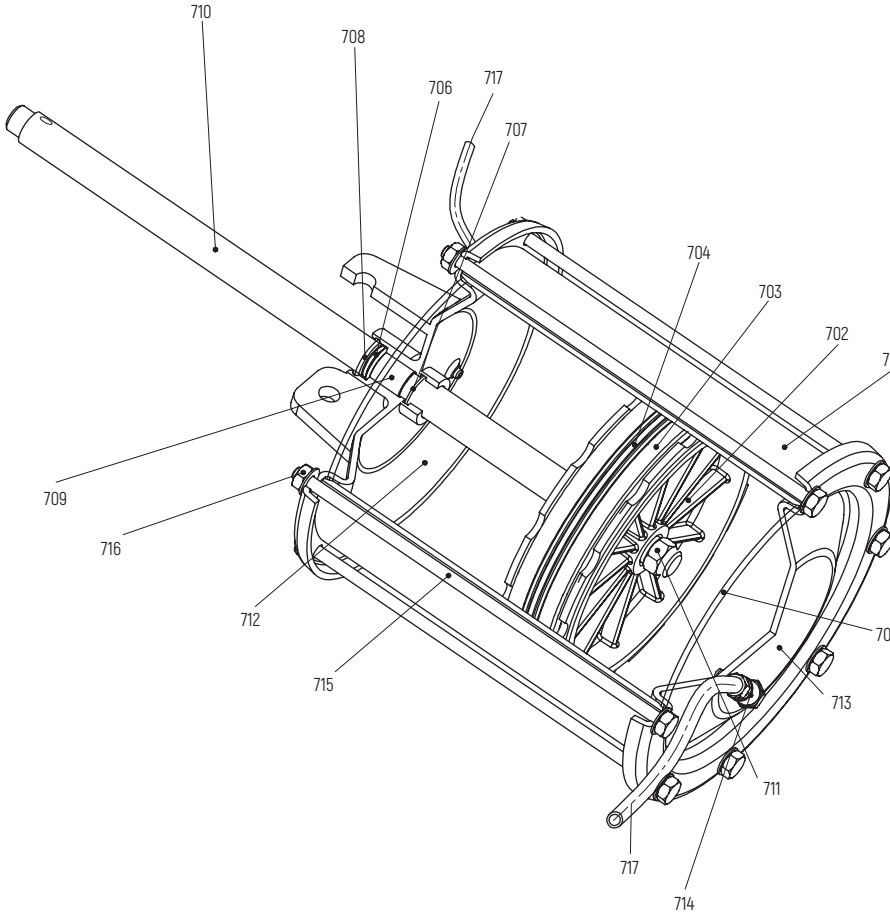
710
708
706
717
707
704
703
702
701
709
716
712
715
705
713
711
717
714

图号	世达编号	规格名称	数量
701	PAE1021-701	大气缸缸筒	1
702	PAE1021-702	活塞	1
703	PAE1021-703	V 型密封圈	2
704	PAE1021-704	活塞导向环	1
705	PAE1021-705	密封圈 Ø182×2.65	2
706	PAE1021-706	骨架防尘圈	1
707	PAE1021-707	密封圈 Ø19×2.65	1
708	PAE1021-708	ϕ30 孔用卡簧	1
709	PAE1021-709	自润滑复合轴承	1
710	PAE1021-710	活塞杆	1
711	PAE1021-711	外六角螺母 M18*1.5*9mm	1
712	PAE1021-712	上缸盖	1
713	PAE1021-713	下缸盖	1
714	PAE1021-324B	带旋转快拧弯头 1/8-ϕ8*5	2
715	PAE1021-715	外六角螺栓 M8*230mm	8
716	PAE1021-716	防滑锁紧螺母 M8	8
717	PAE1021-717	气管 Φ8*900mm	2

6 380V 电机部分：

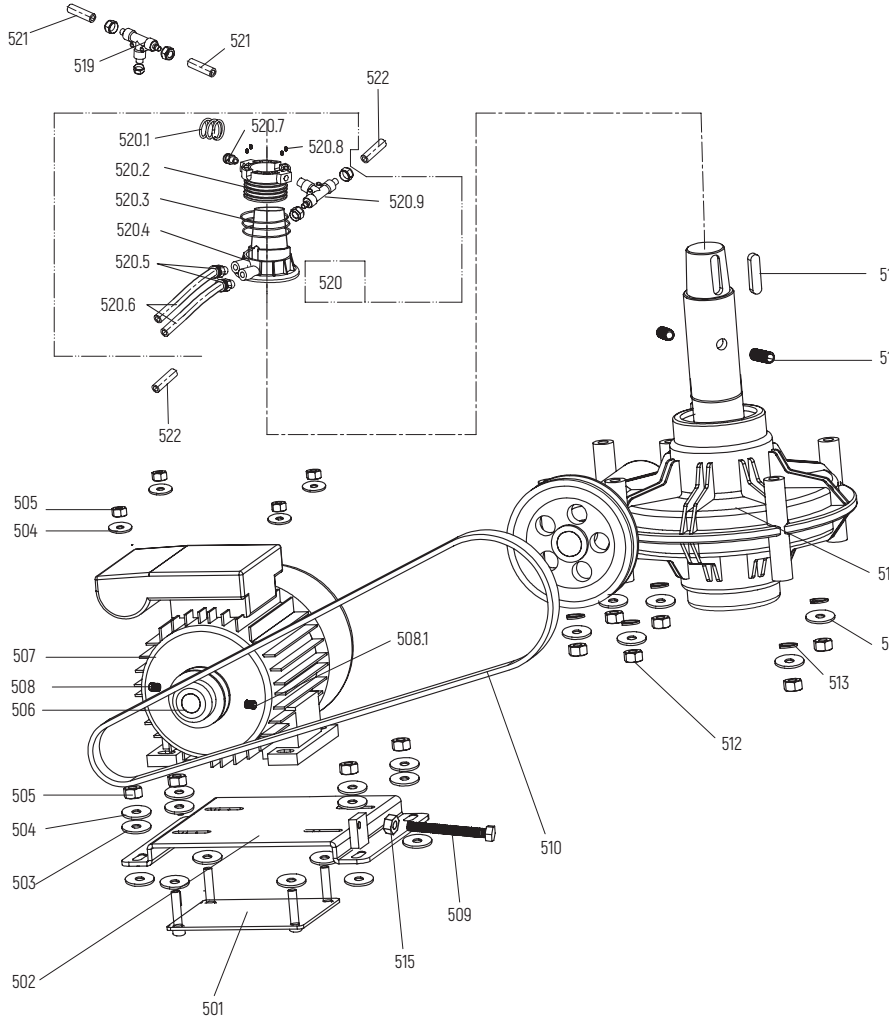
521
519
521
522
520.7
520.1
520.8
520.2
520.3
520.9
520.4
520.5
520
520.6
522
518
517
505
504
511
514
507
508.1
508
506
513
512
505
504
510
503
509
515
502
501

图号	世达编号	规格名称	数量
501	PAE1021-501	电机支架板组焊	1
502	PAE1021-11	电机安装板组焊	1
503	PAE1021-503	电机橡胶垫	8
504	PAE1021-114	平垫圈 ф8*17	8
505	PAE2021-126	螺母 M8	9
506	PAE1021-506	皮带轮	1
507	PAE1021-507	电机 50HZ/220V	1
508	PAE1021-508	内六角凸端顶丝 M8*16	1
508.1	PAE1021-508A	内六角凹端螺丝 M8*12	1
509	PAE1021-509	外六角螺栓 M8*70	1
510	PAE1021-510	楔型皮带 7P-440J	1
511	PAE1021-511	蜗轮箱总成	1
512	PAE1021-512	螺母 M10	6
513	PAE1021-513	弹性垫圈 ф10	6
514	PAE1021-514	平垫圈 ф10*20*2	6
515	PAE2021-126	螺母 M8	1
516	PAE1021-516	220V 电机胶垫	8
517	PAE1021-517	内六角凹端紧钉螺仃 M10*35	2
518	PAE1021-518	减速器 A 型平健 10*40	1
519	PAE1021-519	快拧三通 3*ф8*5	1
520	PAE1021-520	旋转配气阀总成	1
520.1	PAE1021-34B	弹簧管 UCф8*5-5	1
520.2	PAE1021-520B	配气阀芯	1
520.3	PAE1021-520C	O 型密封圈 61.5*3.55	3
520.4	PAE1021-520D	配气阀套	1
520.5	PAE1021-520E	快插直通 1/8-ф8	2
520.6	PAE1021-520F	气管 8*1000	2
520.7	PAE1021-324C	快拧直通 1/8-ф8*5	1
520.8	PAE1021-520H	内六角凹端紧钉螺钉 4*6	4
520.9	PAE1021-520I	快拧三通 1/8-2*ф8*5	1
521	PAE1021-521	气管 Φ8*60mm	2
522	PAE1021-522	气管 Φ8*500mm	2

7 3380V 电机部分：

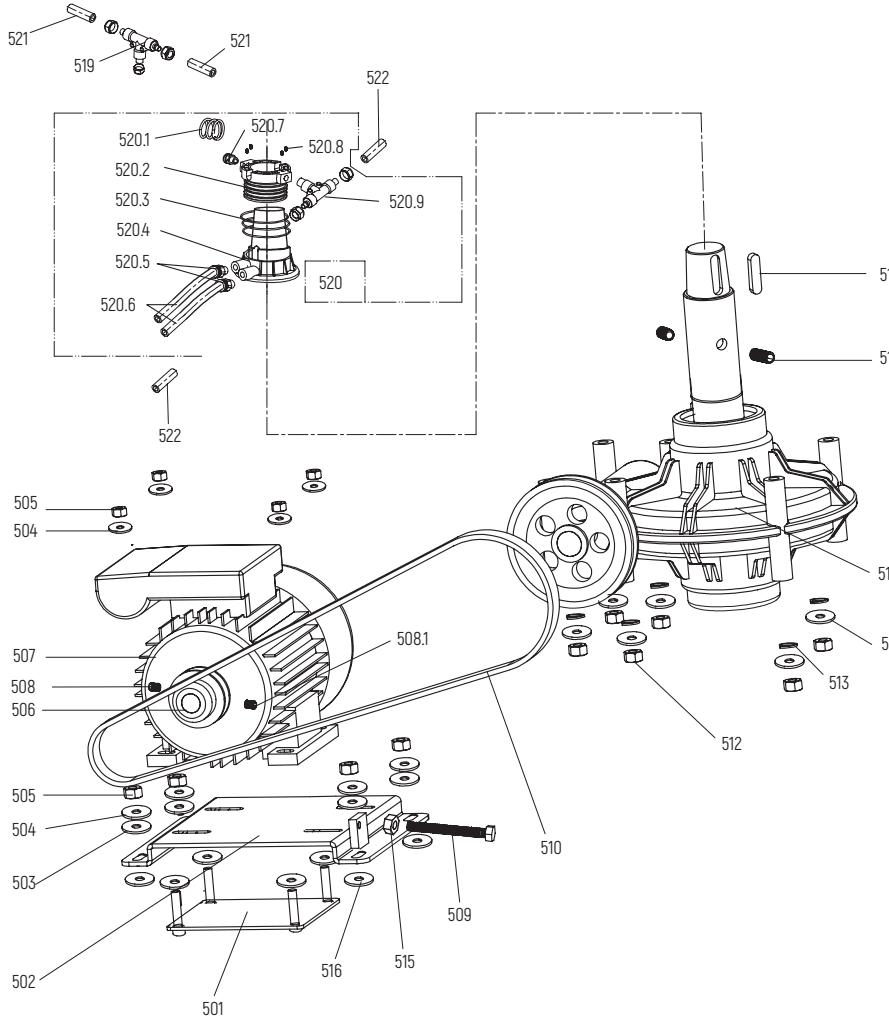
521
519
521
522
520.7
520.1
520.8
520.2
520.3
520.9
520.4
520.5
520
520.6
522
518
517
505
504
511
514
507
508.1
508
506
513
512
505
504
510
503
509
502
516
515
501

图号	世达编号	规格名称	数量
501	PAE1021-501	电机支架板组焊	1
502	PAE1021-11	电机安装板组焊	1
503	PAE1021-503	电机橡胶垫	8
504	PAE1021-114	平垫圈 ф8*17	8
505	PAE2021-126	螺母 M8	9
506	PAE1021-506	皮带轮	1
507	PAE1021-507	电机 50HZ/220V	1
508	PAE1021-508	内六角凸端顶丝 M8*16	1
508.1	PAE1021-508A	内六角凹端螺丝 M8*12	1
509	PAE1021-509	外六角螺栓 M8*70	1
510	PAE1021-510	楔型皮带 7P-440J	1
511	PAE1021-511	蜗轮箱总成	1
512	PAE1021-512	螺母 M10	6
513	PAE1021-513	弹性垫圈 ф10	6
514	PAE1021-514	平垫圈 ф10*20*2	6
515	PAE2021-126	螺母 M8	1
516	PAE1021-516	220V 电机胶垫	8
517	PAE1021-517	内六角凹端紧钉螺仃 M10*35	2
518	PAE1021-518	减速器 A 型平健 10*40	1
519	PAE1021-519	快拧三通 3*ф8*5	1
520	PAE1021-520	旋转配气阀总成	1
520.1	PAE1021-34B	弹簧管 UCф8*5-5	1
520.2	PAE1021-520B	配气阀芯	1
520.3	PAE1021-520C	O 型密封圈 61.5*3.55	3
520.4	PAE1021-520D	配气阀套	1
520.5	PAE1021-520E	快插直通 1/8-ф8	2
520.6	PAE1021-520F	气管 8*1000	2
520.7	PAE1021-324C	快拧直通 1/8-ф8*5	1
520.8	PAE1021-520H	内六角凹端紧钉螺钉 4*6	4
520.9	PAE1021-520I	快拧三通 1/8-2*ф8*5	1
521	PAE1021-521	气管 Φ8*60mm	2
522	PAE1021-522	气管 Φ8*500mm	2

8 脚踏总成：

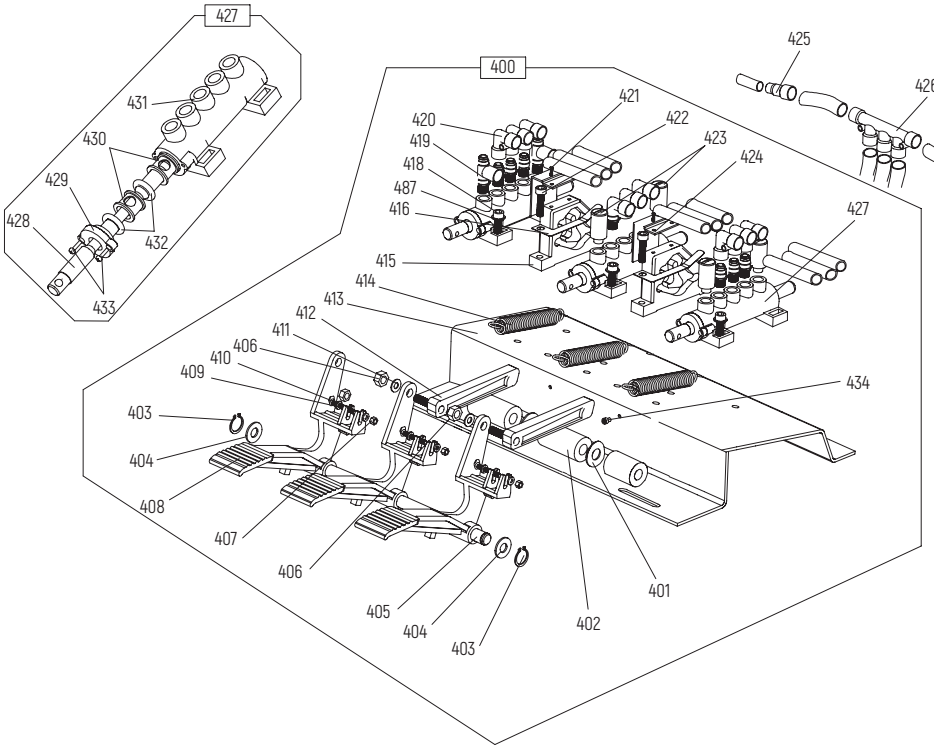
427
431
430
429
428
432
433
400
425
426
421
420
422
419
423
418
424
487
416
427
415
414
413
412
411
406
410
409
434
403
404
408
407
406
405
404
403
402
401

图号	世达编号	规格名称	数量
400	PAE1022H-400	三脚踏组装总成	1
401	PAE1021-403	平垫圈 ф12*24*1.5	2
402	PAE1021-437	轴套	1
403	PAE1021-322	轴用卡簧 ф12	2
404	PAE1021-316	平垫圈 ф12*24*2	9
405	PAE1021-404	轴 ф12*282	1
406	PAE1021-716	自锁螺母 M8	2
407	PAE1021-438	自锁螺母 M4	3
408	PAE1021-407	大脚踏板	3
409	PAE1021-439	十字槽沉头螺钉 M4*35	3
410	PAE1021-440	平垫圈 ф4	3
411	PAE1021-114	平垫圈 ф8*17	2
412	PAE1021-413	凸轮连杆	2
413	PAE1022-413	脚踏支架组焊	1
414	PAE1021-435	脚踏拉簧	3
415	PAE1021-420	凸轮体	2
416	PAE1021-421	凸轮弹簧片	2
417	PAE2021-311	平垫圈 ф6*12*1.5	14
418	PAE1021-416	内六角圆头螺栓 M6*25	11
419	PAE1022-419	快插调节阀 1/8- 6	2
420	PAE1022-420	快插弯头 1/8	9
421	PAE1021-418	十字槽半圆头自攻螺钉 3*10	4
422	PAE1021-416	内六角圆头螺栓 M6*25	4
423	PAE1021-422	消声器 1/8	4
424	PAE1021-419	凸轮罩	2
425	PAE1022-425	快插直通 ф6 转 ф8	1
426	PAE1022-426	快插五通 5*ф8	1
427	PAE1022-427	五通阀体总成	3
428	PAE1022-428	五通阀杆 12mm	3
429	PAE1021-429	五通阀盖	3
430	PAE1021-430	五通阀隔套	15
431	PAE1021-431	五通阀体	3
432	PAE1021-432	O 型密封圈 12*20*4	18
433	PAE1021-418	十字槽半圆头自攻螺钉 3*10	6
434	PAE1021-434	内六角圆头螺栓 M5*10	1

9 单脚踏：

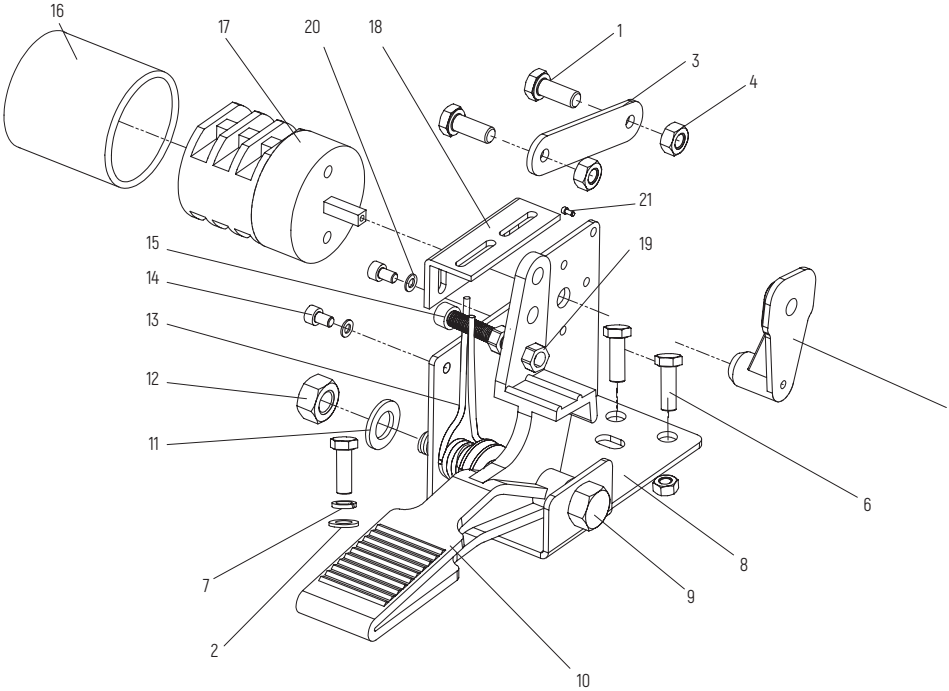

图号	世达编号	规格名称	数量
1	PAE1021-414	内六角沉头螺栓 M8*20	2
2	PAE1021-110	平垫圈 ф8*24*2	1
3	PAE1022-3	拉杆条	1
4	PAE1021-716	自锁螺母 M8	4
5	PAE1021-417	开关支架	1
6	PAE1021-108	外六角螺栓 M8*20	3
7	PAE1021-113	弹性垫圈 ф8	1
8	PAE1022-8	单脚踏支架板	1
9	PAE1022-9	外六角螺栓 M12*85	4
10	PAE1021-407	大脚踏板	1
11	PAE1021-316	平垫圈 ф12*24*2	4
12	PAE1022-12	自锁螺母 M12	2
13	PAE1021-409	脚踏扭簧 ф3.5*20.4*70	2
14	PAE1021-24	内六角圆柱头螺栓 M6*10	2
15	PAE1021-509	内六角圆柱头螺栓 M8*30	1
16	PAE1021-443	开关胶套	1
17	PAE1021-425	转换开关	1
18	PAE1022-18	扭簧支架	1
19	PAE2021-126	螺母 M8	1
20	PAE2021-311	平垫圈 ф6*12*1.5	2
21	PAE2021-118	十字圆头螺钉 M4*10	1

10 铲臂总成：

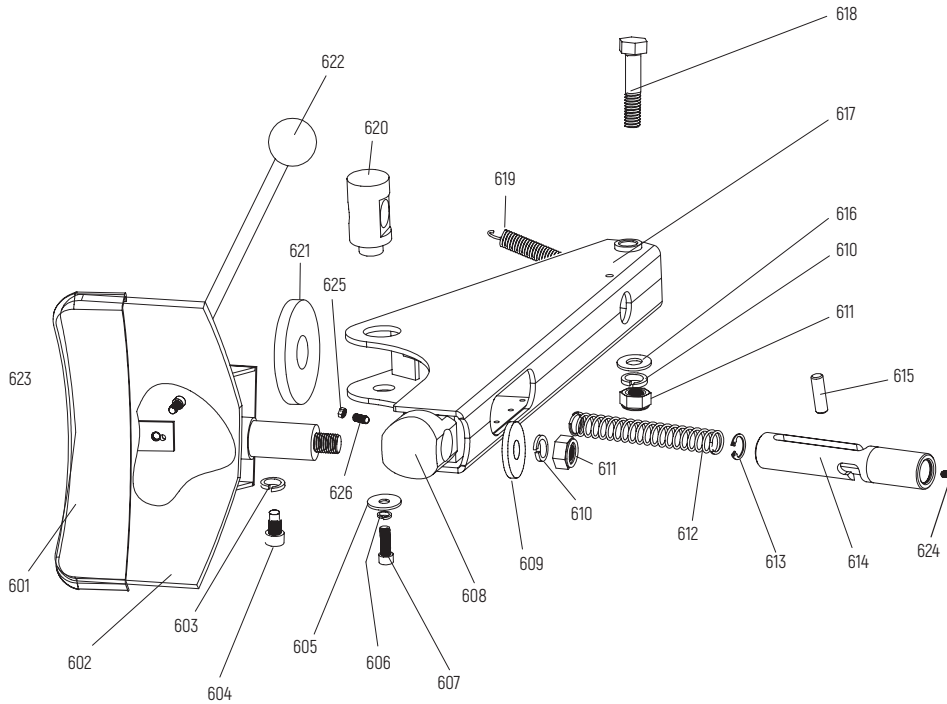
618
622
617
620
619
616
621
610
625
611
623
615
611
626
610
612
609
613
614
624
601
608
603
605
602
606
604
607

图号	世达编号	规格名称	数量
601	PAE1021-601	压胎铲护套	1
602	PAE1021-602	压胎铲	1
603	PAE1021-603	弹性垫圈 ϕ14	2
604	PAE1021-604	定位钉	2
605	PAE1021-605	平垫圈 ϕ8*30*2	1
606	PAE1021-113	弹性垫圈 ϕ8	1
607	PAE1021-108	外六角螺栓 M8*20	1
608	PAE1021-608	压胎铲转轴	1
609	PAE1021-131	工作台大垫圈	1
610	PAE1021-303	弹性垫圈 ϕ16	2
611	PAE1021-132	自锁螺母 M16	2
612	PAE1021-612	调节套压簧 Φ1.5*19.5*125	1
613	PAE1021-613	孔用卡簧 ϕ20	1
614	PAE1021-614	大气缸活塞杆调节套	1
615	PAE1021-615	大气缸活塞杆销轴 10*33	1
616	PAE1021-616	平垫圈 ϕ16*30*2	1
617	PAE1021-617	铲臂	1
618	PAE1021-618	外六角螺栓 M16*100	1
619	PAE1021-619	铲臂拉簧 ϕ2.5*20*7.5	1
620	PAE1021-620	大气缸拉杆套	1
621	PAE1021-621	铲臂胶垫	1
622	PAE1021-622	黑球手柄 M16*50	1
623	PAE1021-24	内六角圆柱头螺栓 M6*10	1
624	PAE2021-405	内六角圆柱头螺栓 M6*16	1
625	PAE1021-625	螺母 M10	1
626	PAE1021-626	内六角凹端紧定螺钉 M10*20	1

11 右辅助臂：

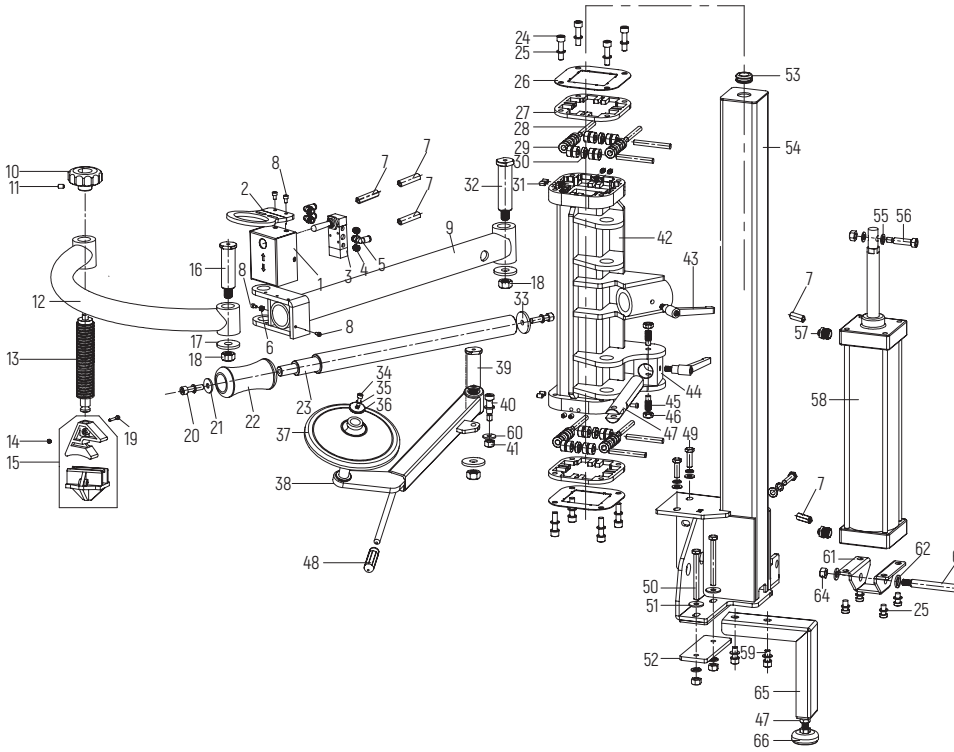

图号	世达编号	规格名称	数量	图号	世达编号	规格名称	数量
1	PAE1022-H1	手推阀护盒	1	34	PAE1021-308	内六角圆柱头螺栓 M8*20	1
2	PAE1022-H2	把手	1	35	PAE1021-113	弹性垫圈 ф8	1
3	PAE1022-H3	手推阀	1	36	PAE1022-H36	加大平垫圈 8	1
4	PAE1021-422	消声器 1/8	2	37	PAE1022-H37	托胎盘	1
5	PAE1022-221	快插弯头 1/8-ф6	3	38	PAE1022-H38	右托胎臂	1
6	PAE2021-121	螺母 M6	1	39	PAE1022-H39	托臂销	1
7	PAE1022-H7	气管 6×3500mm	3	40	PAE1022-H40	塞打螺丝 M12*30	1
8	PAE1021-24	内六角圆柱头螺栓 M6*10	5	41	PAE1022-208	自锁螺母 M10	3
9	PAE1022-H9	右横臂	1	42	PAE1022-H42	升降滑套	1

图号	世达编号	规格名称	数量	图号	世达编号	规格名称	数量
10	PAE1022-H10	梅花手柄 12*80	1	43	PAE1022-H43	7 字型锁紧手柄	2
11	PAE1022-H11	内六角凹端紧钉螺钉 6*6	1	44	PAE1022-H44	转动块	1
12	PAE1022-H12	弯臂	1	45	PAE1022-H45	锁紧板定位钉	2
13	PAE1022-H13	双线丝杆	1	46	PAE1021-107	螺母 M12	3
14	PAE1022-H14	自锁螺母 M6	1	47	PAE1022-H47	托胎锁紧杆	1
15	PAE1022-H15	压胎头	1	48	PAE1022-H48	铲臂手柄套	1
16	PAE1022-H16	横臂销	1	49	PAE1022-H49	外六角螺栓 M10*40	4
17	PAE1021-131	工作台大垫圈	3	50	PAE1022-H50	外六角螺栓 M10*120	2
18	PAE1021-132	自锁螺母 M16	3	51	PAE2021-212	加厚平垫圈 10*25*4	8
19	PAE2021-313	内六角圆柱头螺栓 M6*35	1	52	PAE1022-H52	立柱固定夹板	1
20	PAE1021-127	外六角螺栓 M10*25	2	53	PAE1022-H53	护线圈 ф28-5	3
21	PAE2021-108	平垫圈 ф10*30*2	1	54	PAE1022-H54	立柱组件	1
22	PAE1022-H22	压胎辊	1	55	PAE1021-317	弹性垫圈 ф12	1
23	PAE1022-H23	压杆轴	1	56	PAE1022-H56	塞打螺丝 M12*40	1
24	PAE1022-27	外六角螺栓 M10*30	8	57	PAE1022-H57	快插直通 1/2-ф6	2
25	PAE2021-208	弹性垫圈 ф10	16	58	PAE1022-H58	标准气缸（不带座）Φ100x350	1
26	PAE1022-H26	滚轮盖板	2	59	PAE1021-127	外六角螺栓 M10*25	2
27	PAE1022-H27	滚轮夹板	2	60	PAE2021-209	平垫圈 ф10*20*2	1
28	PAE1022-216	轴承钢圆柱销 M10*80	8	61	PAE1022-H61	气缸底座	1
29	PAE1022-H29	滚针轴承带内圈 NA6900	16	62	PAE1021-303	弹性垫圈 ф16	1
30	PAE1022-218	深沟球轴承 6900Z	8	63	PAE1022-H63	塞打螺丝 M16*110	1
31	PAE1021-508A	内六角凹端紧钉螺钉 8*12	8	64	PAE1022-202	自锁螺母 M12	1
32	PAE1022-H32	横臂销	1	65	PAE1022-H65	支撑杆	1
33	PAE1022-206	锁紧垫片	1	66	PAE1022-H66	带橡胶减震脚杯垫脚	1

No.

Date

Table of Contents

Technical parameters	Outside clamp diameter	Inside clamp diameter	Rim width	Maximum tire diameter	Large cylinder push-pull effort
AE1022H	10-20"	12-24"	3"-13"	39"(1010mm)	2100 kgf
AE1022H-3					

Technical parameters	Crankset rotation speed	Working pressure	Working noise	Carton size	Gross weight
AE1022H	6.5 rpm	8-10 bar	≦ 70 db	1000*920*1000mm	336/294 Kg
				1150*520*300mm	88/75 Kg
AE1022H-3				1000*920*1000mm	332/290 Kg
				1150*520*300mm	88/75 Kg

Please check the products immediately after unpacking to ensure that they are in good condition. If any missing or damaged parts are found, please call the customer service department of SATA Automotive Technology (Shanghai) Co., Ltd:
400-820-3885, 800-820-3885.

Please record the serial number of the product:_____

Note: If the product does not have a serial number, please record the purchase date.

Please keep the operation instructions properly:

1) The operation instructions cover product safety warning, installation and operation, maintenance, common fault handling, etc. Please take good care of it.
2) Please record the serial number (or purchase date) of this product on the front page of the operation instructions, and keep the operation instructions in a dry and safe place for reference.
3) Please use the product correctly on the basis of fully understanding the contents of the instructions.
4) Product liability insurance has been covered for the product.

Chapter I Safety Precautions

- Incorrect operation may cause personal injury and equipment damage.
- Please read carefully and understand all the contents of the instructions before use.
- Please ensure that children and other unauthorized personnel stay away from the work area.
- Ensure that the equipment is connected to the correct power and air source, and is reliably grounded.
- Please use this equipment on a flat, level, dry and reliable bearing plane.
- Avoid accidental startup. Please ensure that the equipment is turned off and the electrical source is disconnected before maintenance.
- Keep the protection device and safety device in the correct position and keep working normally.
- Keep the work area clean and well lit. Chaos or dark areas may cause accidents.
- It is strictly prohibited to overload this product, otherwise the resulting accident liability will not be covered by the insurance.
- Please keep away from heat and fire source. High temperature may cause damage to this equipment and sealing elements.
- Avoid dangerous environment. Do not use equipment in humid environment or expose it to rain.
- It is strictly prohibited for any untrained personnel to use this equipment, and it is not allowed to disassemble or refit this equipment voluntarily.
- Ensure that the wheels are installed correctly, and correct way is selected according to different wheel hubs to lock and fix them on the equipment.
- Check carefully before each use. If there is oil leakage, loosen or damaged parts and accessories, they cannot be used.
- Please let professionals with professional maintenance qualifications maintain the equipment reasonably. If accessory replacement is required, please use original accessory.
- Safety shoes, safety goggles and working gloves conforming to relevant national safety regulations for safety protection must be worn during operation, and related Sata products are recommended.
- It is strictly prohibited to use the equipment after drinking, mental fatigue, inattention, drowsiness and any unconsciousness caused by drugs.

Warning

The notices, warnings, instructions and other information contained in the instructions cannot cover all possible situations. Operators must understand that daily prudent operation and professional knowledge are indispensable factors in operating this product.

1.1 Warning labels

Keep hands away from tires during operation.

Wear protective equipment during operation.

Please read the instructions carefully before use.

Beware of electric shock!

Note: Do not touch the tire sidewall with your hands during tire pressing.

Do not put any part of your body under the mounting head.

When clamping the rim, please note that hands and other parts are not allowed to enter between the claw and the rim.

Do not stand between the shovel blade and the tire during tire pressing to avoid injury.

Beware of hurting people by tilting back the column.

1.2 Location diagram of safety sign

Pay attention to keep the safety sign intact. If it is vague or lost, new sign shall be replaced immediately. The operator shall clearly see the safety sign and clearly identify the correct meaning of the sign.

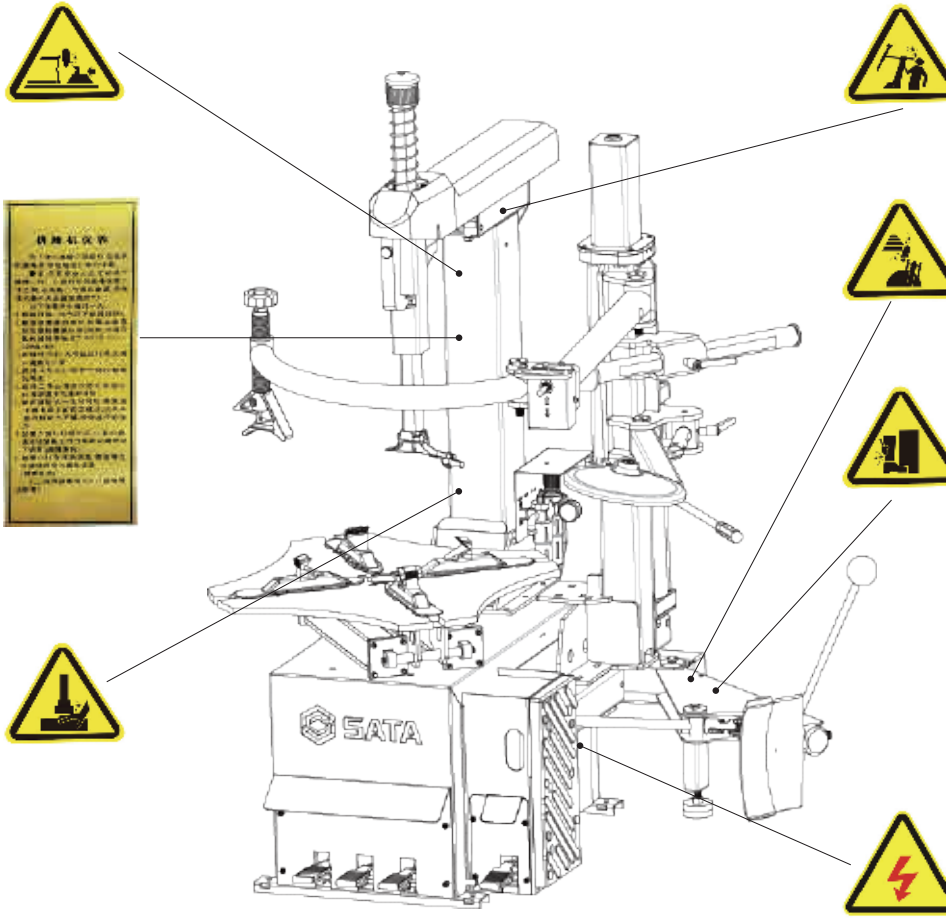

Chapter II Installation Instruction

The installation of tire changer must be completed by professionals. Safe and effective use depends on correct installation.
If you have any questions, please contact the authorized dealer of Sata.

2.1 Equipment size and use space

- The tire changer must be placed on a firm flat floor and fixed with bolts.
- The location where the tire changer is to be installed must be provided with power and air source for connection.
- In suitable placement location for tire changer, sufficient operation space must be reserved around the tire changer.
- Ensure that there is enough space above and behind the selected position for the auxiliary arm or reversing arm to work normally.
- Reserve at least 500mm operating space on the right and front of the tire changer for tire mounting and tire pressing.

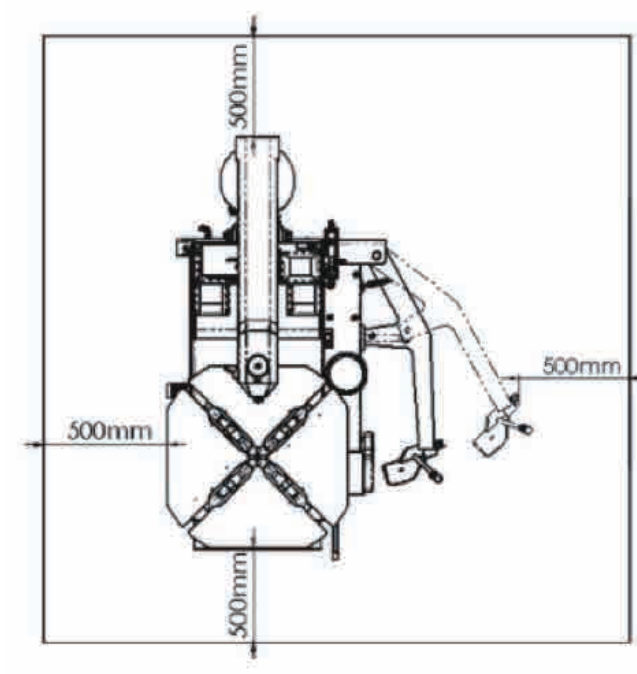

AE1022H/AE1022H-3

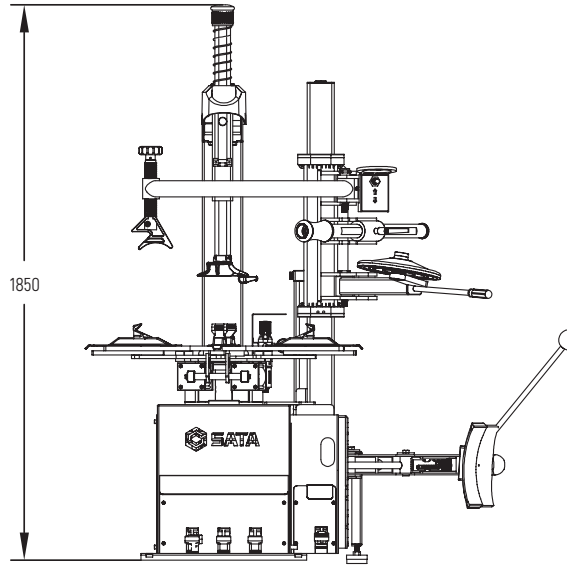

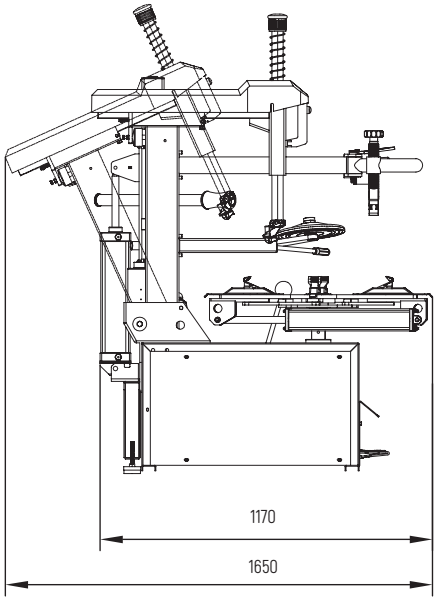

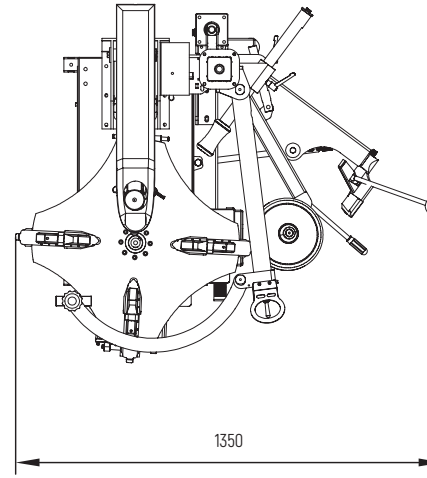

2.2 Safety rules

- This equipment shall be operated by professionals or trained personnel.
- The company will not be responsible for unauthorized movement of equipment (especially for electrical parts).
- Any treatment for electrical parts can only be carried out by professionals.

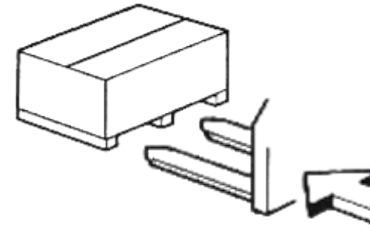

2.3 Transportation/unpacking

- Forklift handling is adopted, and moving position is as shown in the right figure.
- Unpack and check whether the equipment is damaged.
- Keep packing materials away from children to avoid danger.

Note

The surface of the equipment is coated with a layer of special anti-rust oil, which is easy to be coated with dust and shall be wiped off as much as possible when necessary.

2.4 Product drawings

1. Rotating pedal
2. Tire pressing pedal
3. Clamping pedal
4. Reversing arm pedal
5. Workbench
6. Claw
7. Column
8. Mounting head
9. Sliding arm
10. Control handle
11. Hexagon pressure rod
12. Auxiliary arm assembly
13. Oil atomizer
14. Tire pressing shovel arm
15. Tire pressing rubber pad

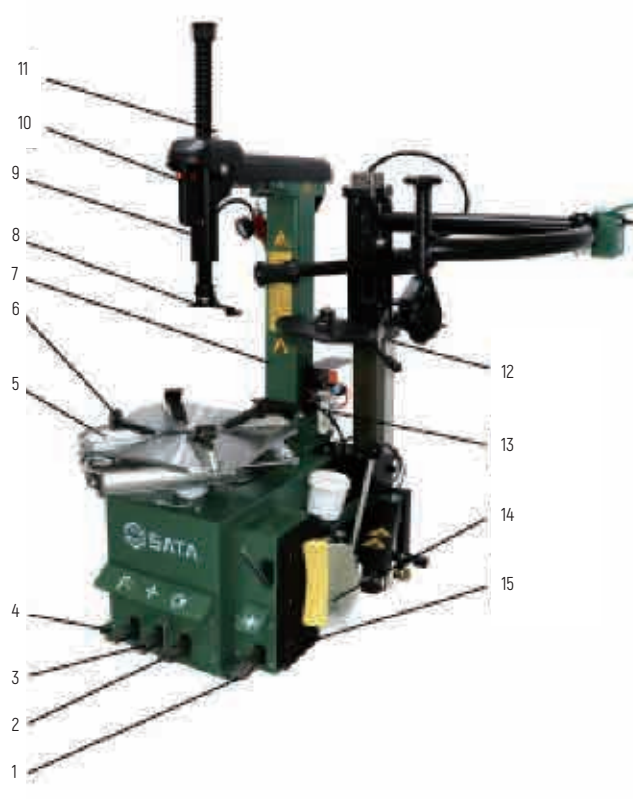

2.5 Standard accessories

Inflation gauge

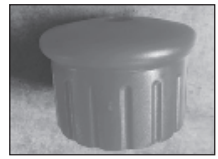

Hexagon rod pressure spring cap

Hexagon rod pressure spring

20-inch crowbar

Mounting head infilled pad - front/rear

Crowbar sheath

Column hook

Instructions

2.6 Erection of column

a. Dismount the column shaft on the rear inclined arm seat to be mounted.

b. Put the air pipe on the column through the square groove on the rear inclined arm seat.

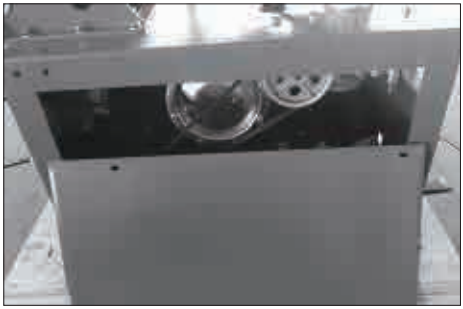

c. Dismount the four set screws from the left side panel of the chassis, and then dismount the left side panel.

d. Connect the air pipe on the column to the 8-to-6 joint, and remount the siding plate.

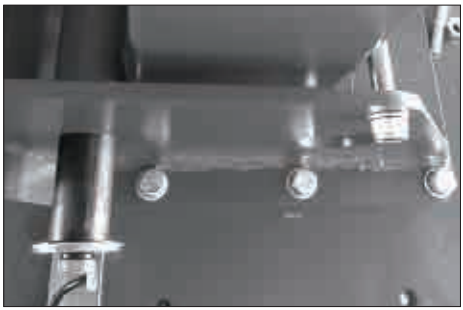

e. Insert the column shaft into the column, and fix it with the stud and washer.

f. Connect the cylinder rod to the column with a bolt.

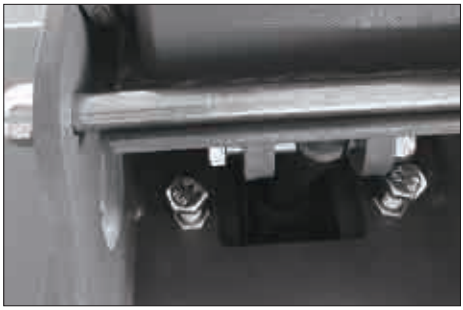

g. Adjust the set screws on both sides of the column.

h. Install the column protective cover.

2.7 Power source connection

Before energizing, check whether the network voltage is consistent with the voltage value indicated on the equipment label.

Very important: The equipment is connected with the electrical system, which shall be equipped with circuit fuse, good grounding shall conform to the local national standards, and leakage protection devices shall be provided for the equipment when necessary to ensure safe operation of the equipment.

2.8 Air source connection

1) Step on the clamping pedal to ensure that the crankset claw will not suddenly open.
2) Connect the air source to the oil-water separator with a quick connector. And adjust the pressure gauge to display air pressure.
3) Connect the inflation gauge to the air source with a pipeline, and press the handle to confirm that the inflation function is normal.

2.9 Complete machine test

1) Step on the rotating pedal to turn the crankset clockwise. Jack up the pedal to turn the crankset counterclockwise.
2) Step on the clamping pedal to open the four crankset claw, and step on the pedal again to close the claw.
3) Step on the tire pressing clamping pedal to put the tire leaning shovel into working state through the tire shovel, and step on the pedal again to return the tire leaning shovel to the original position.
4) Step on the reversing arm pedal to tilt the column backward in U shape; step on the pedal again to return the column to the working position.
5) Press the handle button (Y position) to lock the tire dismounting arm and push-pull arm; return the handle button (Z position) to unlock the tire dismounting arm and push-pull arm.
6) Check whether there is 1 oil drop dripping from the oil-water separator after stepping on the pedal for 3-4 times. If not, use screws for adjustment.

Note: For 380 V equipment models, if the rotation direction of the crankset is different from the above direction, replace the two phase lines on the 3-phase wiring terminal.

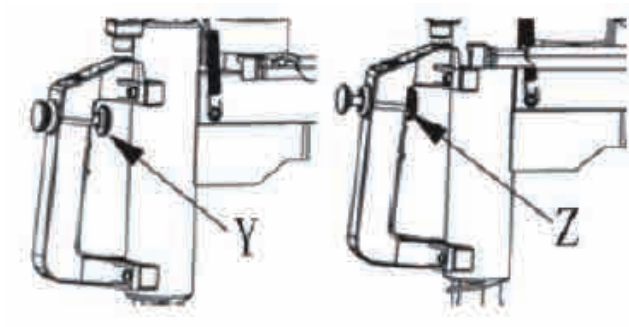

Chapter III Operation Guide

3.1 Do not use the machine until you have read and understood the entire instructions and the warnings therein. Before the operation, release the air from the tire and remove all leads from the wheel. The operation of the tire changer includes the following parts: a) tire leaning; b) tire dismounting; c) tire mounting.

3.2 It is suggested to equip a pressure regulator for the tire changer.

3.3 Tire leaning

- Be extremely careful in the tire leaning. During rapid and forceful movement upon being driven by the tire leaning pedal, the tire leaning arm will cause danger and crushing to everything in its moving area.
- Check whether the air is released from the tire; if not, empty the tire. Close the crankset claw thoroughly.
- If the claw is in an open position during tire leaning, it will be extremely dangerous to the operator's hands. Never touch the tire wall with the hands during tire leaning.

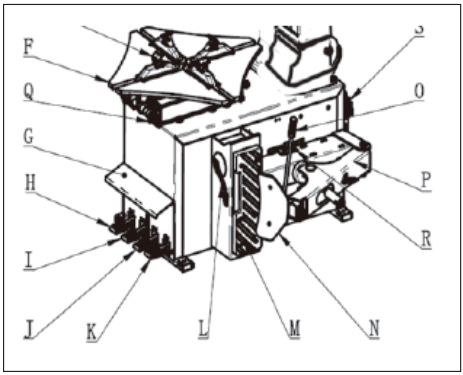

- Place the wheel on the tire leaning rubber on the right side of the tire dismounting chassis. Place the tire leaning shovel against the tire opening about 1 cm away from the rim. Note that the tire leaning shovel is placed on the top of the tire instead of the rim.

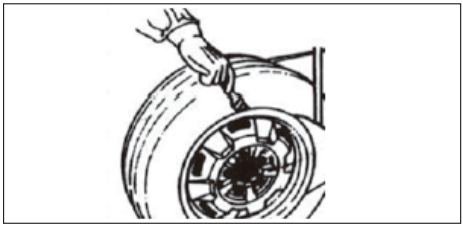

- Step on the pedal and move the tire leaning shovel. When the tire leaning shovel reaches the end of its operation route or breaks the tire opening, loosen the pedal and gently rotate the tire until the tire is completely removed from the rim.

3.4 Tire dismounting

- Before operation, make sure all the original leads are removed, and check the deflation of tires.
- Make sure no one is behind the tire changer when the column tilts back.
- Step on the pedal to tilt the column, so as to clean the crankset.
- Apply the grease (or similar grease) on the tire opening. Failure to use grease will cause serious damage to the tire opening.
- Never put your hand under the tire while locking the rim. The correct fixing operation enables the tire to be just located in the center of the crankset.

3.5 External clamp

Place the tire according to the position of the claw on the crankset, step down the pedal to the middle position to make the tire on the claw, press down the rim and step on the pedal (Figure 5-1 I) to the limit position.

3.6 Internal clamp

- Position the tire according to the position of the claw to close it completely, put the tire on the claw and press the rim downward, step on the pedal to open the claw, so as to clamp the rim.
- Make sure the rim is firmly secured to the claw.
- Never put your hand above the tire. The return of the column to the working position will squeeze the operator's hand, so the column will be clamped between the tire and rim.
- Step on the pedal and turn the column, so that the locking button is in position; unlock the tire dismounting arm M and move it downward, so that the birdhead is on the top of the rim. Position the locking button to lock the whole tire assembly. This kind of locking is both horizontal and vertical. The tire dismounting head is 2 mm away from the rim. Insert the crowbar between the tire opening and the birdhead, so that the tire opening moves above the birdhead.
- In order to avoid damaging the inner tube, the valve shall be located 10 cm the right side of the tire dismounting head.
- Necklace, bracelet, loose clothes or foreign matters near moving parts will endanger the operator.

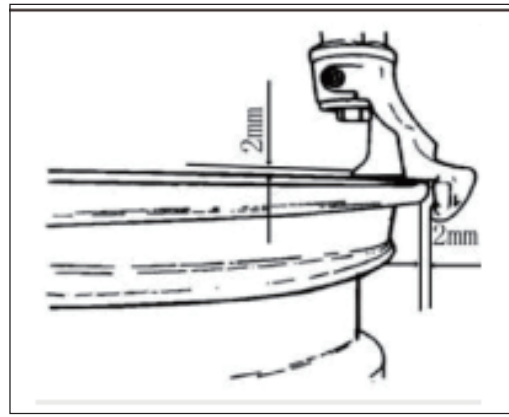

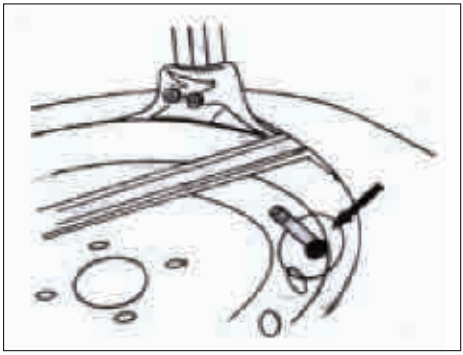

- Use a crowbar to pry the tire bead onto the bulge part on head end of the mounting head. Step on the rotary table steering pedal (Figure 5-1 K) to turn the rotary table clockwise until the upper tire bead is completely removed. If a tire with an inner tube is to be dismounted, in order to avoid damaging the inner tube, the valve shall be about 10 cm away from the right side of the tire dismounting head during operation.

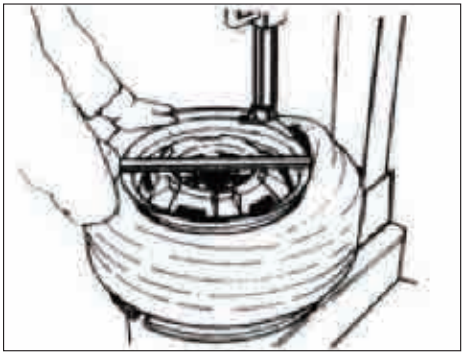

- In order to dismount the inner tube, step on the pedal to tilt the column without releasing the locking of the tire dismounting arm; repeat this operation to break the tire opening on the other side.

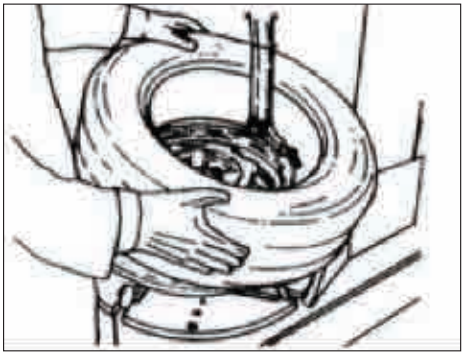

3.7 Tire installation

- The most important thing is to check the tires and rims to prevent explosion during inflation. Before starting the installation operation, ensure that: The tire and tire tread fiber are damaged. If so, do not install the tire; there are no dents and warpings on the rim upon visual inspection, pay attention to there are no tiny scratches on the inner side of the aluminum alloy rim, which are dangerous, especially during air inflation.
- Lubricate the tire opening with special grease, so as to avoid damaging the tire opening and facilitate operation. When the rim is locked, do not put your hands under the tire. The correct operation is to position the tire in the center of the crankset and make sure that no one is standing behind the column while the tire is tilted.
- If the size of the dismounted rim is the same, it is unnecessary to lock or unlock the tire dismounting arm frequently. All you need to do is to tilt back or restore the column to the working position and keep the tire dismounting arm in the working position.
- Never put your hand above the tire. The return of the column to the working position will squeeze the operator's hand, so the column will be clamped between the tire and rim.
- Move the tire so that the tire opening passes under the front end of the birdhead, and the turnup of the tire opening is pushed against the rear part of the birdhead to press the tire opening into the slot of the rim by hand. Step on the pedal to cause the crankset to rotate clockwise. Continue this operation until the tire is fully loaded into the rim.
- In order to prevent industrial accidents, keep hands and other parts of the body as far away as possible from the tire dismounting arm when the crankset rotates, put the inner tube and repeat the operation mentioned above.
- When dismounting and mounting tires, the crankset shall rotate clockwise. Counterclockwise rotation is only used for error correction when the machine is shut down and causes the operator's error.

Chapter IV Installation and Operation of Auxiliary Arm

4.1 Size and use space of auxiliary arm

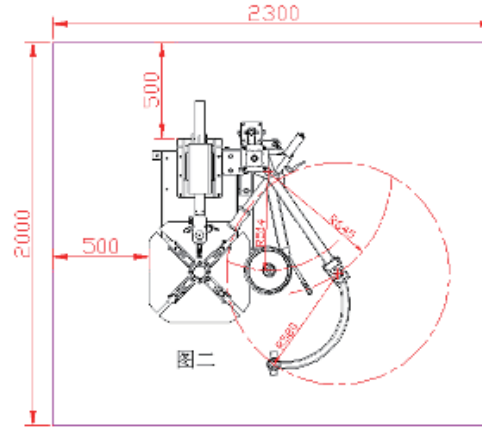

4.2 Components

1. Column
2. Lifting sliding seat
3. Roller sliding bar (fixed tire pressing arm)
4 Lifting cylinder
5. Supporting anchor
6. Tire supporting arm
7. Tire supporting tray
8. Round transverse arm (rotary tire pressing transverse arm)
9. Tire pressing screw rod
10. Control valve

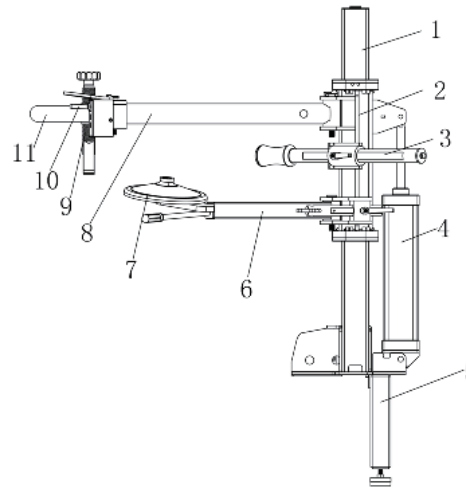

4.3 Installation

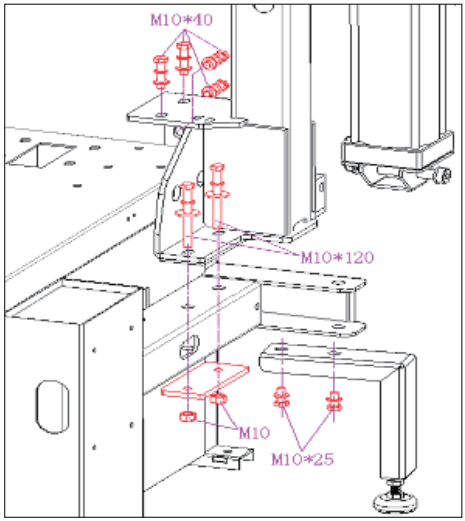

1) Fix the auxiliary arm on the corresponding hole position of the chassis with 4 outer hexagon socket head bolts (M10*40), 2 outer hexagon socket head bolts (M10*120) and 2 self-locking nuts (M10), and connect the supporting leg to the column guide rail with outer hexagon socket head bolts (M10*25).

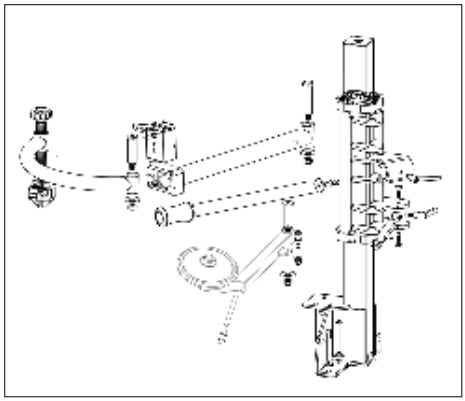

2) Mount the rotary tire pressing arm, fixed tire pressing arm and tire supporting arm on the sliding sleeve components, and insert corresponding air pipes.

4.4 Operation instructions

The control handle is used to control the rising and falling of the tire pressing block and the tire pressing wheel, so as to adapt to the height of tire mounting and dismounting.

4.5 Mounting of tire pressing shovel:

1 Take out the tire pressing shovel and dismount the spacer and locking nut on the shaft of the tire pressing shovel.

2 Penetrate the tire pressing shovel shaft into the shovel arm crank shaft.

3 Mount the gasket and locking nut and lock them with the wrench.

Chapter V Storage

When the equipment needs to be stored for a long time, please disconnect the power and air source. Lubricate all parts to be lubricated: sliding block, sliding block slot on crankset and auxiliary arm mounting position. Drain off all oil/liquid storage. Cover the equipment with a plastic housing to prevent dust.

Chapter VI Scrapping

When the equipment life is over and it cannot be used again, please handle it properly according to relevant local laws and regulations.

Chapter VII Daily Maintenance

In order to prolong the service life of the machine, regular maintenance shall be carried out according to the instructions. Otherwise, the operation reliability of the machine will be affected, resulting in possible injuries to operators and personnel near the machine. Warning: Before any maintenance work is carried out, the air and power source must be disconnected, and the remaining compressed air in the machine must be exhausted by stepping on the lower pedal 3-4 times. Damaged parts must be replaced by professional maintenance personnel with spare parts provided by the original factory.

1) Keep the claw and cylinder control valve of tire pressing shovel clean.
2) After using the machine for 20 days, retighten the fixing screw (A) on the chuck claws.
3) If the rotating force of the chuck is not enough, check the tension of the belt as follows. Loosen the screws on the left side plate of the machine, remove the side plate, adjust the two adjusting screws for installing the motor to keep appropriate distance between the adjusting bracket and the motor seat, and then tighten the screws to achieve the effect of tensioning the driving belt.
4) In order to ensure the reliable opening/closing of the claw and the large cylinder of the tire pressing shovel, the control valve connected thereon shall be kept clean and can be maintained according to the following instructions. Remove the 4 screws of the left side panel of the machine to dismount the side panel. Loosen the valve body muffler on the claw opening/closing or large cylinder control pedal.
5) Clean the dirt on the muffler with compressed air. If it is damaged, please refer to the spare parts table for replacement.

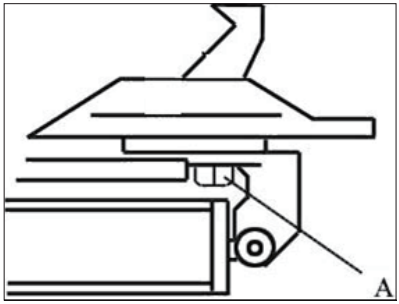

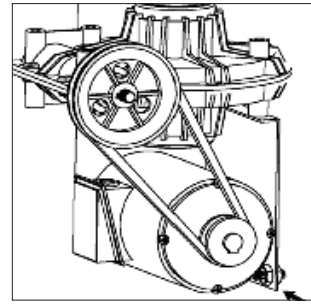

6) Air pressure shall not exceed 10 bar.
7) Keep the workbench clean to prevent dust accumulation, and lubricate the claw seat and guide rail.
8) If the swing arm is not locked or does not reach the required size for working, the swing arm locking plate needs to be adjusted.
9) If the column swings, it is necessary to fasten the screws on both sides of the column shaft.
10) Check the oil level of the oil atomizer cylinder. If refueling is required, loosen the screw with hexagon socket wrench or unscrew the cylinder counterclockwise to add oil. Only VG32 lubricating oil can be added. Under the condition of connecting compressed air, step on the pedal once for the first time to see if the first oil drop drips from the oil atomizer. When in continuous use, step on the pedal to see if an oil drop drips from the oil atomizer.

Pull out the cover, rotate the adjustable pressure. The pressure setting range is 8-10 bar.

Press down the cover to lock the pressure.

Regularly check the water level of the steam-water separator. Do not exceed 50% height of the separator. If necessary, turn the locking button to drain water manually.

Check the lubricating oil level every day, and open the oil cap to add oil when necessary. Attention: It is forbidden to use lubricating oil exposed to air for a long time.

Check the lubrication conditions every day to ensure that the lubricating oil drips into the oil atomizer when stepping on the pedal. If necessary, use a screwdriver to adjust the adjusting screw of the oil atomizer.

Chapter VIII Faults and Troubleshooting

8.1 Stuck work tray

Maintenance idea: First of all, distinguish between circuit fault and mechanical fault.

Maintenance method:

- Step on or lift the two direction switch pedal, and observe the motor response. If there is no response, use a multimeter to measure whether the voltage between terminals is normal on the two direction switch. If the voltage is abnormal, check the power supply line or power plug. If the voltage is normal, use a multimeter to measure whether the voltage between and terminals on the two direction switch is normal when stepping on or lifting the power switch pedal. If not, the two direction switch is broken. If normal, the motor or the capacitor is broken.
- If the motor is buzzing but cannot rotate, the measurement method is the same as above. If the measurement result is abnormal, the two direction switch is broken. If it is normal, turn the gearbox belt pulley by hand. If it cannot be turned by hand, the gearbox is faulty. If it can be turned by hand, the motor or capacitor is faulty.
- If the motor can rotate normally and the work tray does not rotate, it shall be a gearbox fault, such as: failure of gearbox pulley to drive the worm to rotate; the worm gear outburst, etc.

8.2 Tire dismounting inability

Maintenance method: Observe the working conditions of the motor during tire dismounting. If the motor cannot rotate during tire dismounting, it means that the torque of the motor is too small or the capacitor is faulty. If the motor can rotate, but the pulley is slipping, the explanation is that the belt is too loose. Just tighten the belt.

8.3 Failure in clamping the steel ring by the claw

Maintenance method: Check whether the air source pressure meets the requirements of the instructions. If it meets the requirements, check for air leakage or gas blow-by. If there is no air leakage or gas blow-by, the explanation is poor concentric height of claw.

8.4 Failure in tire pressing for large cylinder

Maintenance idea: In case of tire dismounting inability (including the movable large cylinder and loose tire pressing under no load), the air pressure is generally low, and air leakage or gas blow-by occurs in the large cylinder. If the large cylinder cannot move under no load, the general explanation is that the compressed air is not applied to the tire pressing end of the large cylinder.

- Check whether the air supply pressure meets the requirements of the instructions. If it meets the requirements, check whether there is air leakage in the large cylinder. Check the air pipes at both ends of the large cylinder. Connect the air source. One of the two air pipes on the five-way valve shall be ventilated. When stepping on the tire pressing pedal, the other air pipe shall be ventilated. If it is abnormal, replace the five-way valve or adjust the installation position of the five-way valve to make it work normally.
- If the five-way valve is checked to be normal, connect the air pipe at the reset end. The explanation is normal if the nozzle at working end of tire pressing is not ventilated. If it is ventilated, the explanation is that the piston of the large cylinder is cracked or the sealing ring is worn.
- Air pressure check: Use air pressure gauge to check whether the air pressure at the inlet end of the oil atomizer meets the requirements of the instructions. If the air pressure at the inlet end is insufficient, turn up the air supply for the air compressor. If the air pressure at the inlet end meets the requirements and the air pressure at the outlet end is insufficient, adjust the pressure regulating knob of the oil atomizer. If the pressure regulating knob does not work, replace the oil atomizer.

8.5 Steel ring scraping and tire wearing on tire dismounting head:

- Untight hexagonal prism pin lock
- Loose mounting head screws or wrong orientation
- Large clearance between the hexagonal prism and the hexagon sleeve

Maintenance method:

- Adjustment of loose mounting head screws: Pre-tighten (not too tight) the screws first, and then tighten the screws. When tightening the screws, install a medium-sized tire so that the trolley wheel of mounting head rests on the steel ring, rotate the direction of mounting head to match it with the radian of steel ring, tighten again, and finally screw down.
- If the hexagonal prism is pulled manually and the swing is relatively large, replace the rocker arm.

8.6 The claw does not open or close properly:

check whether there is air leakage, check whether the five-way valve core jumps out of the pedal fork. If the above is normal, check whether there is gas blow-by in the rotary distribution valve. When the pedal is not stepped or fully stepped, only one of the air pipes connecting the rotary valve to the small cylinder is ventilated. In any case, the explanation for the phenomenon that the two gas pipes are not ventilated at the same time is that there is gas blow-by from the rotary distribution valve. If there is no problem in the above parts, check the mechanical part. Whether the claw seat is deformed or jammed, whether the square rotary table is jammed, whether the square rotary table is jammed, and whether the pin of the square rotary table falls off.

8.7 Common troubleshooting methods

Fault phenomenon	Fault causes	Troubleshooting methods
Steel ring scraping/tire wearing on mounting head	Displacement of mounting head caused by loose column	Locking column
	Displacement of mounting head caused by loose rocker arm/slide arm	Adjust rocker arm/slide arm clearance
	Displacement of mounting head caused by large hexagon rod clearance	Adjust hexagon rod clearance
	Loose mounting head	Lock the mounting head
	Falling off of plastic spacer on mounting head	Mount the plastic spacer
	Too small clearance between mounting head and rim	Adjust the clearance between mounting head and rim 2-4 mm
Failure in clamping the rim with claw	Air leakage/gas blow-by of clamping cylinder	Check connection of gas pipe/replace sealing ring
	Air leakage/gas blow-by of rotary distribution valve	Check connection of gas pipe/replace sealing ring
	Wrong position/air leakage/gas blow-by of five-way valve	Adjust the position of five-way valve/ replace O-ring
	Low air pressure of oil atomizer	Adjust the oil atomizer pressure/check the gas source pressure
	Decentraction/damage of four claws	Adjust the claw distance the eccentric bearing/ replace the claw
Large cylinder inability	Large cylinder air leakage/gas blow-by	Check connection of gas pipe/replace sealing ring
	Wrong position/air leakage/gas blow-by of five-way valve	Adjust the position of five-way valve/ replace O-ring
	Low air pressure of oil atomizer	Adjust the oil atomizer pressure/check the gas source pressure
	Low cylinder intake	Adjust limit screws on five-way valve pedal
Motor inability	Damage of 220 V motor starting capacitor	Replace the capacitor
	Phase loss of 380 V power source	Check phase of power source
	Loose belt	Tighten the belt
Out-of-operation of motor	Damage of 220 V motor starting capacitor	Replace the capacitor
	Phase loss of 380 V power source	Check phase of power source
	Damage to switch or wiring error	Check switch wiring/replace the switch
	No power source or poor plug contact	Check power source/replace plug
Unfastened hexagon rod lock	Large clearance of locking plate	Adjust the clearance of locking plate

Fault phenomenon	Fault causes	Troubleshooting methods
Large clearance of sliding arm	Wrong position of upper and lower roller bearing and side top thread	Adjust position
Cylinder gas blow-by	Damage of piston seal ring/gas pipe joint	Replace
Cylinder air leakage	O-ring damage/piston rod scratch/gas pipe joint damage	Replace
Five-way valve air leakage	O-ring damage/gas pipe joint damage	Replace
Five-way valve gas blow-by	O-ring damage	Replace
Oil atomizer air leakage	O-ring damage/foreign matters/gas pipe joint damage	Replacement/removal of foreign matters
No oil drop from oil atomizer	Too little amount of oil drop adjusted/no oil	Increase the amount of oil drop/refueling
Air leakage from rotary distribution valve	O-ring damage/gas pipe joint damage	Replace
Gas blow-by from rotary distribution valve	O-ring damage	Replace
Failure in closing opened claw/jittering	Foreign matters/no lubricating oil/claw deformation	Clean up foreign matters/lubricate/replace
The belt is liable to damage	Too tight belt/out-of-level between the belt pulley and the belt disk/overuse	Adjust position and level/replace
The positive and negative rotation of switch is opposite.	Wrong wiring	Reconnect/replace
Loud noise produced by reduction gearbox	Loose screw/no lubricating oil/bearing damage	Lock screw/lubricate/replace

Chapter IX Circuit and Gas Diagram

220V

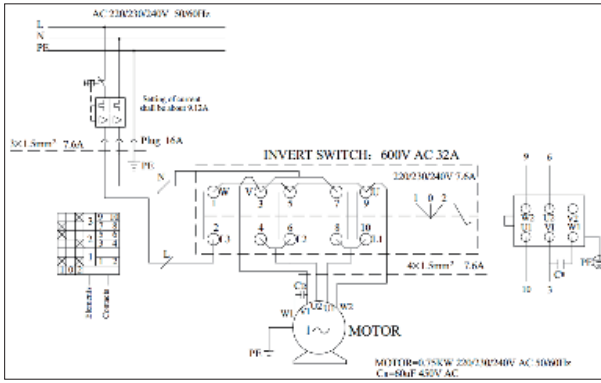

380V

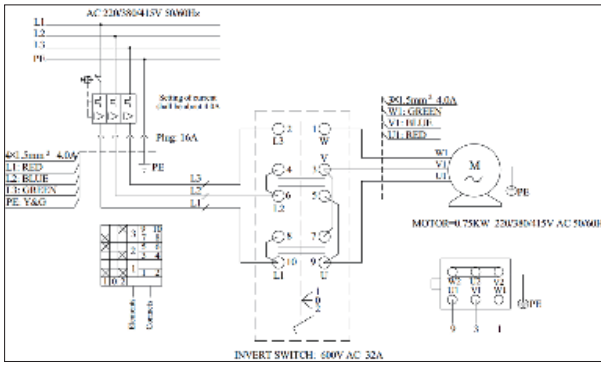

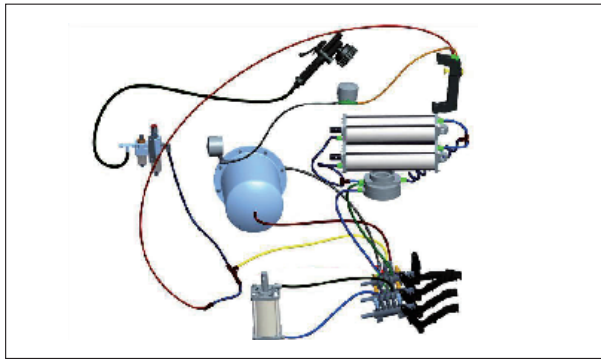

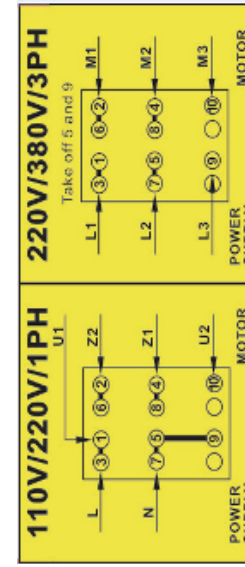

Switch wiring diagram 220 V/380 V (99*47.4)

Chapter X Product Explosion Diagram

1 Sliding arm assembly:

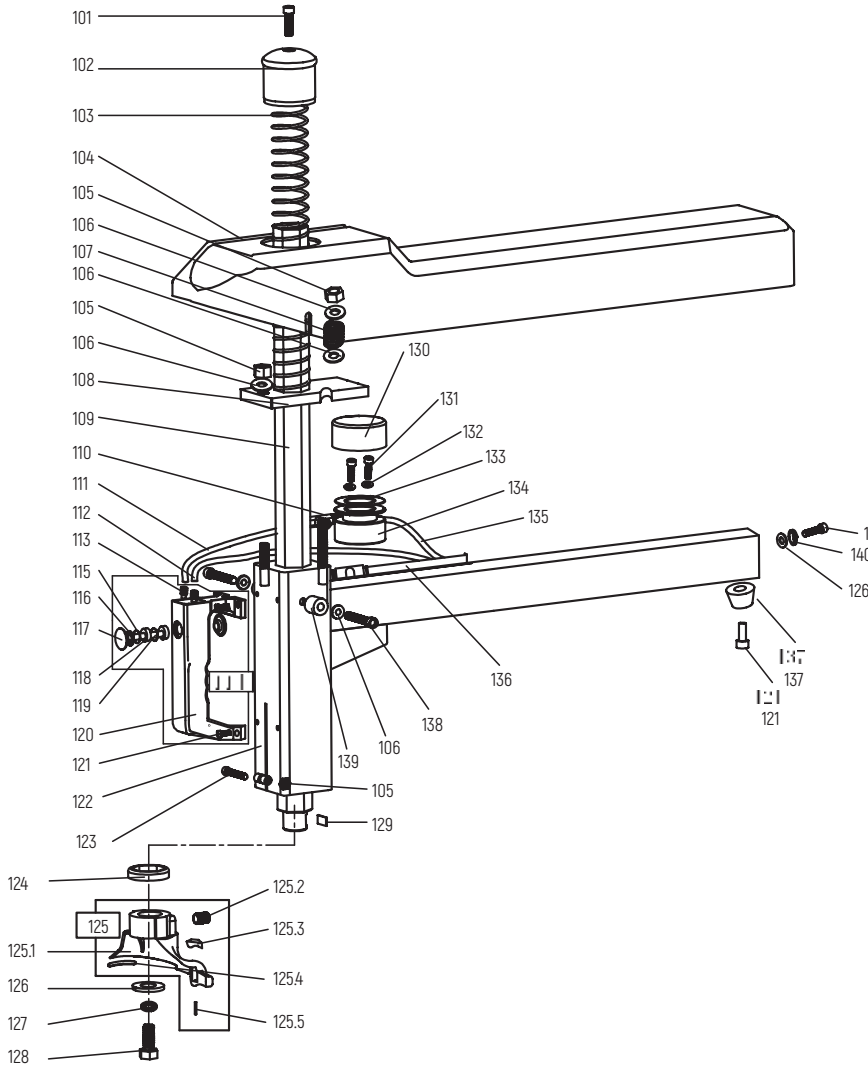

Drawing No.	Sata No.	Specification name	Quantity	Drawing No.	Sata No.	Specification name	Quantity
101	PAE1022-101	Hexagon socket head bolt M8*35	1	124	PAE1021-120	Absorbing pad S40*50*10	1
102	PAE1021-102	Hexagon pressure rod cap S40	1	125	PAE1022-125	Mounting head assembly	1
103	PAE1021-104	Pressure rod spring Ø3.5*55*600	1	125.1	PAE1022-125A	Mounting head	1
104	PAE1022-104	Sliding arm protective cover	1	125.2	PAE1021-125	Hexagon socket female end set screw 12*16	4
105	PAE1021-716	Self-locking nut M8	3	125.3	PAE1021-121	Mounting head infilled pad - front	1
106	PAE1021-110	Flat washer Ø8*24*2	7	125.4	PAE1021-122	Mounting head infilled pad - rear	1
107	PAE1022-107	Locking spring	2	125.5	PAE1021-124	Cylindrical pin M5*24	1
108	PAE1022-108	Hexagon pressure rod locking plate	1	126	PAE1022-126	Mounting head flat washer Ø10.5*33*8.	1
109	PAE1022-109	Hexagon pressure rod	1	127	PAE2021-208	Spring washer ΦΦ10	1
110	PAE1022-110	Quick-screw tee 1/8-2*Ø6	1	128	PAE1021-109	Hexagon head bolt M10*25	1
111	PAE1022-111	Air pipe Ø6*600	1	129	PAE1021-116	Hexagon manganese steel sheet	1
112	PAE1022-112	Air pipe Ø6*300	1	130	PAE1022-130	Locking cylinder block	1
113	PAE1022-113	Quick-screw direct connection 1/8-Ø6	2	131	PAE1022-131	Hexagon socket head bolt M6*40	2
114	PAE1022-114	Handle assembly	1	132	PAE1022-132	Locking cylinder gasket 6	2
115	PAE1022-115	O-ring of control handle 7.5 x 2.65	4	133	PAE1022-133	Locking cylinder - V-ring 60*50*6.5	1
116	PAE1022-116	Control handle-valve capping	1	134	PAE1022-134	Locking cylinder - piston	1
117	PAE1022-117	Control handle valve rod cap	2	135	PAE1022-135	Air pipe Ø6*2200	1
118	PAE1022-118	Control handle-spacer	3	136	PAE1022-136	Air pipe guide groove	1
119	PAE1022-119	Aluminum valve rod Φ7.8*55	1	137	PAE1022-137	Cone environmental foot pad 32*25*20	2
120	PAE1022-120	Control handle	1	138	PAE1022-138	Hexagon socket head bolt M6*45	2
121	PAE1022-121	Hexagon socket head bolt M6*20	5	139	PAE1022-139	Protective cover washer	2
122	PAE1022-122	Sliding arm	1	140	PAE1021-113	Spring washer Φ8	1
123	PAE1021-118	Hexagon socket head bolt M8×40	1	141	PAE1021-108	Hexagon head bolt M8*20	1

2 Column assembly:

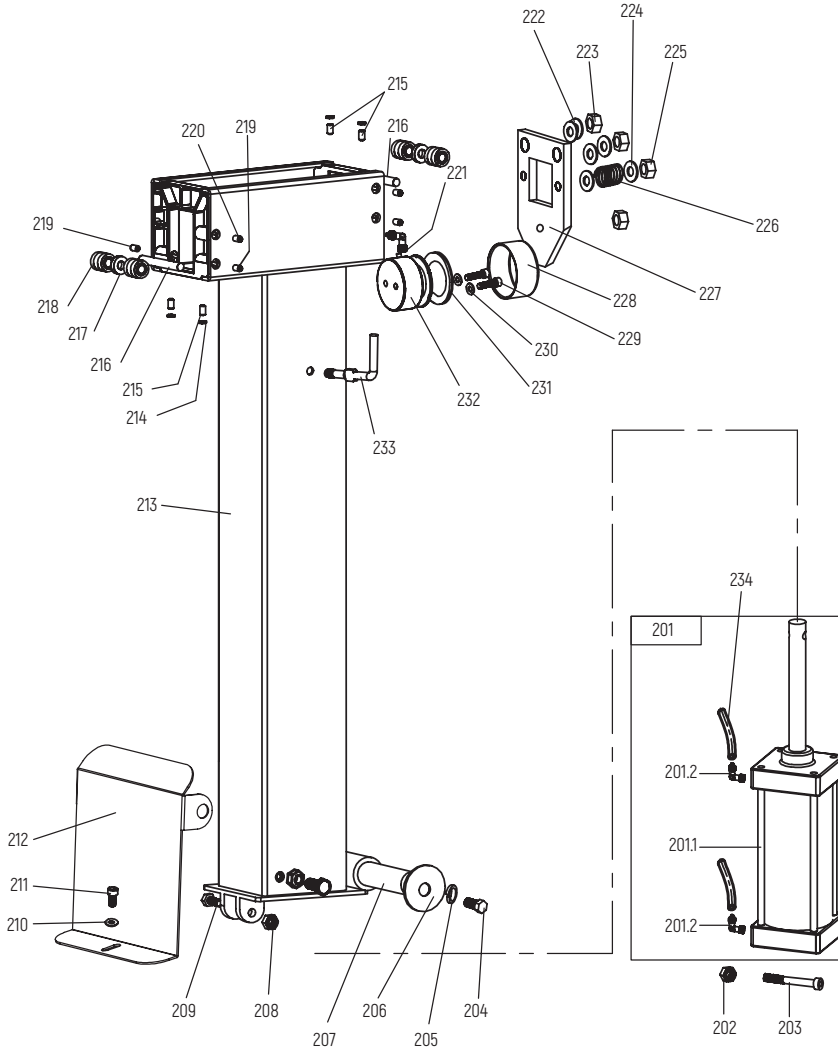

Drawing No.	Sata No.	Specification name	Quantity
201	PAE1022-201	Reversing arm cylinder assembly (with joints)	1
201.1	PAE1022-201A	Cylinder 80*88 (without buffer)	1
201.2	PAE1021-324B	Rotatable quick-screw elbow Φ8*5	2
202	PAE1022-202	Self-locking nut M12	1
203	PAE1022-203	Hexagon socket head cap screw M12*140	1
204	PAE1021-109	Hexagon head bolt M10*25	4
205	PAE2021-208	Spring washer Ø10	2
206	PAE1022-206	Locking washer	2
207	PAE1022-207	Column shaft	1
208	PAE1022-208	Self-locking nut M10	1
209	PAE1021-135	Hexagon head bolt M10*60	11
210	PAE2021-311	Flat washer Ø6*12*1.5	1
211	PAE1021-24	Hexagon socket head cap screw M6*10	1
212	PAE1022-212	Reversing arm protective cover	1
213	PAE1022-213	Column	1
214	PAE1022-214	Nut M10	6
215	PAE1022-215	Hexagon socket female end set screw M10*20	4
216	PAE1022-216	Ball bearing steel cylindrical pin (10*80)	1
217	PAE2021-209	Flat washer Φ10*20*2	2
218	PAE1022-218	Bearing 6900ZZ	16
219	PAE1022-219	Hexagon socket female end set screw M12*20	4
220	PAE1022-220	Purple copper head set screw (M10*32)	2
221	PAE1022-221	Quick-plug elbow 1/8-Φ6	1
222	PAE1021-316	Flat washer Ø12*24*2	1
223	PAE1022-223	Self-locking nut M12	2
224	PAE1021-114	Flat washer Ø8*17*1.5	4
225	PAE1021-716	Self-locking nut M8	2
226	PAE1022-107	Locking spring	2
227	PAE1022-227	Sliding arm locking plate	1
228	PAE1022-130	Locking cylinder block	1
229	PAE1022-131	Hexagon socket head cap screw M6*40	2
230	PAE1022-132	Locking cylinder gasket 6	2
231	PAE1022-133	Locking cylinder - V-ring 60*50*6.5	1
232	PAE1022-134	Locking cylinder - piston	1
233	PAE1021-133	Column hook	1
234	PAE1021-520F	Air pipe Φ8*1000mm	2

3 Workbench assembly:

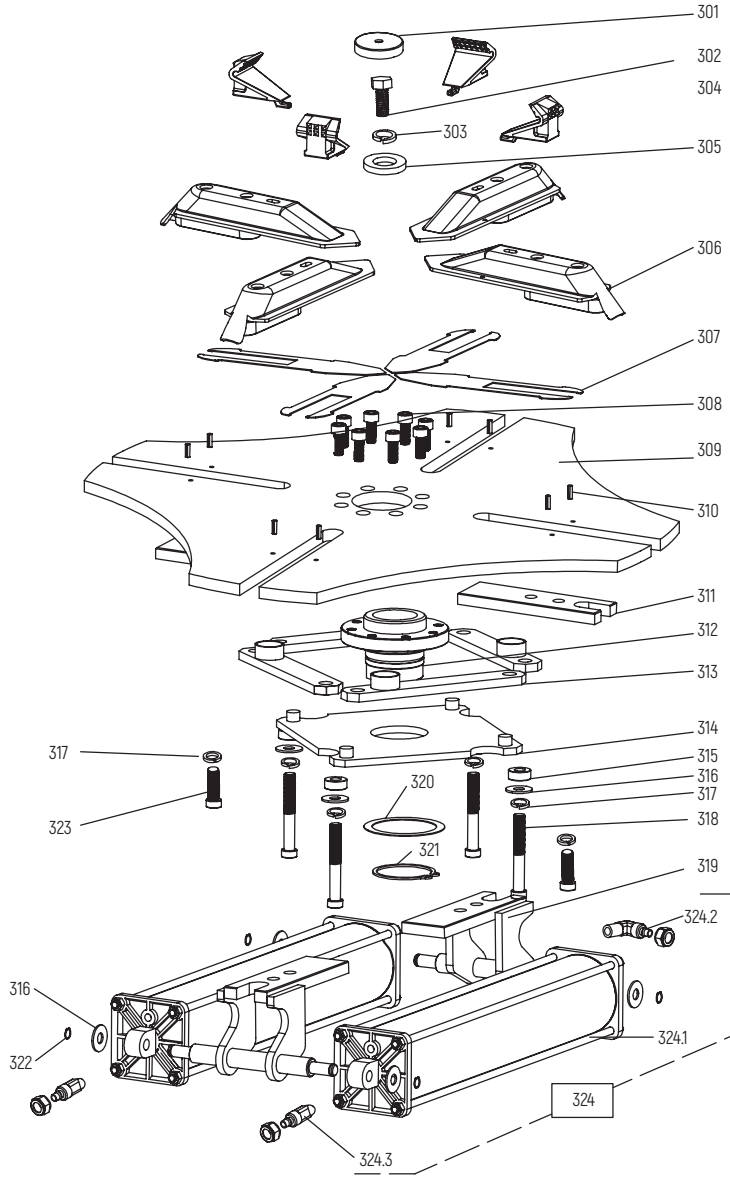

Drawing No.	Sata No.	Specification name	Quantity
301	PAE1021-301	Working platform capping	1
302	PAE1021-302	Hexagon head bolt M16*40	1
303	PAE1021-303	Spring washer Φ16	1
304	PAE1021-304	Claw	4
305	PAE1021-131	Large washer of workbench	1
306	PAE1021-306	Claw cap assembly	4
307	PAE1021-307	Guide pad	4
308	PAE1021-308	Hexagon socket head cap screw M8*20	8
309	PAE1021-309	Workbench plate	1
310	PAE1021-310	Spring pin 5*16	8
311	PAE1021-311	Base plate	4
312	PAE1021-312	Workbench taper sleeve	1
313	PAE1021-313	Stay assembly	4
314	PAE1021-314	Square rotary table assembly	1
315	PAE1021-315	Pull rod pin sleeve	4
316	PAE1021-316	Flat washer Φ12*24*2	8
317	PAE1021-317	Spring washer Φ12	8
318	PAE1021-318	Hexagon head bolt 12*80	4
319	PAE1021-319	B-type claw seat assembly	1
320	PAE1021-320	Square rotary spacer	1
321	PAE1021-321	Clamp spring for axle Φ65	1
322	PAE1021-322	Clamp spring for axle Φ12	4
323	PAE1021-323	Hexagon head bolt M12*35	4
324	PAE1021-324	Clamping cylinder assembly 75*315	2
324.1	PAE1021-324A	Cylinder 75*315	2
324.2	PAE1021-324B	Quick-screw elbow 1/8-Φ8*5	2
324.3	PAE1021-324C	Quick-screw direct connection 1/8-Φ8*5	2

4 Tank assembly:

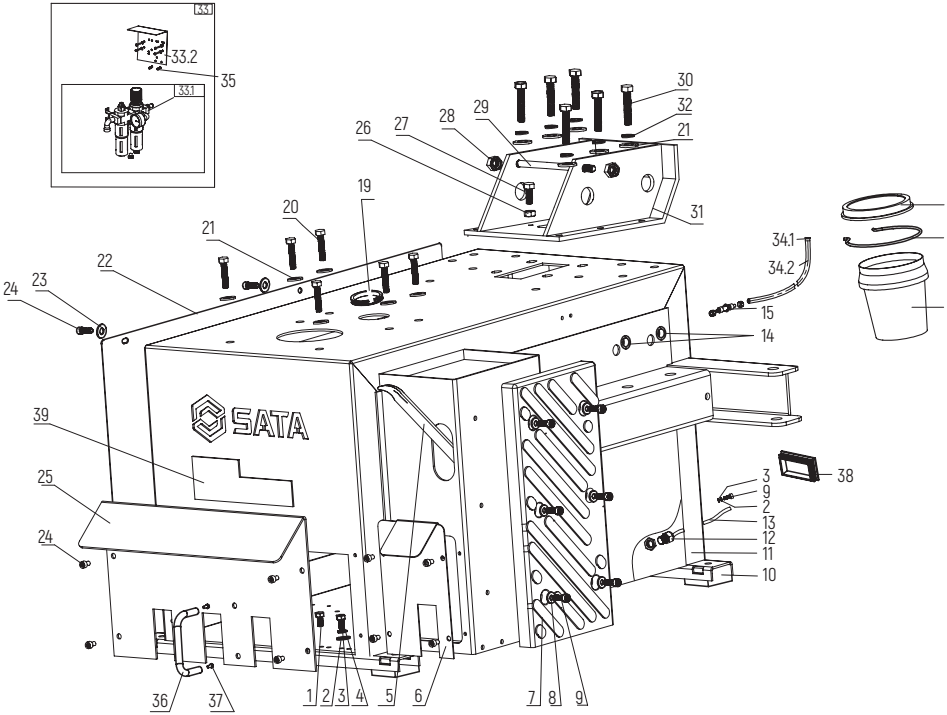

Drawing No.	Sata No.	Specification name	Quantity	Drawing No.	Sata No.	Specification name	Quantity
1	PAE1021-108	Hexagon head bolt M8*202	2	22	PAE1021-22	Left side plate	1
2	PAE1021-113	Spring washer Φ82	2	23	PAE2021-311	Flat washer Φ6*12*1.5	2
3	PAE1021-110	Flat washer Φ8*24*2	2	24	PAE1021-24	Hexagon socket head cap screw M6*10	12
4	PAE1021-109	Hexagon head bolt M8*16	1	25	PAE1022-25	Front cover	1
5	PAE1021-5	Pry bar 20"	1	26	PAE1021-512	Nut M10	2
6	PAE1022-6	Single pedal front cover	1	27	PAE1022-27	Hexagon head bolt M10*40	2
7	PAE1021-7	Tire pressing rubber plate	1	28	PAE1022-208	Self-locking nut M10	2
8	PAE1021-114	Flat washer Φ8*17*1.5	6	29	PAE1022-29	Adjusting screw	1
9	PAE1021-308	Hexagon socket head cap screw M8*20	9	30	PAE1021-135	Hexagon head bolt M10*60	6
10	PAE1021-10	Rubber foot pad	4	31	PAE1022-31	Reversing arm support	1
11	PAE1022-11	Chassis	1	32	PAE2021-208	Spring washer Φ10	6
12	PAE1021-12	Cable screw G13.5	1	33	PAE1021-33	Oil atomizer assembly (with support)	1
13	PAE1021-13	Power line with plug 3 m	1	33.1	PAE1021-33A	Oil atomizer assembly (without support)	1
14	PAE1021-14	Protective ring Φ16	2	34.1	PAE1021-34A	Fast female head SP20-T	1
15	PAE1021-15	Quick-screw partition direct connection 2*8*5	1	34.2	PAE1021-34B	Spring pipe 8*5-5	1
16	PAE1021-16	Circular oil drum	1	35	PAE2021-405	Hexagon socket head cap screw M6*16	2
17	PAE1021-17	Oil box rack	1	36	PAE1021-35	Round steel U-shaped handle	1
18	PAE1021-18	Circular oil box cover	1	37	PAE2021-118	Cross recessed cup head with pad screw M4*10	2
19	PAE1021-19	Protective ring Φ45	1	38	PAE1021-37	Plastic square plug 60*100	1
20	PAE1021-20	Hexagon head bolt M10*160	6	39	PAE2021-115	LOGO backplane	1
21	PAE2021-209	Flat washer Φ10*20*2	12				

5 Large cylinder assembly:

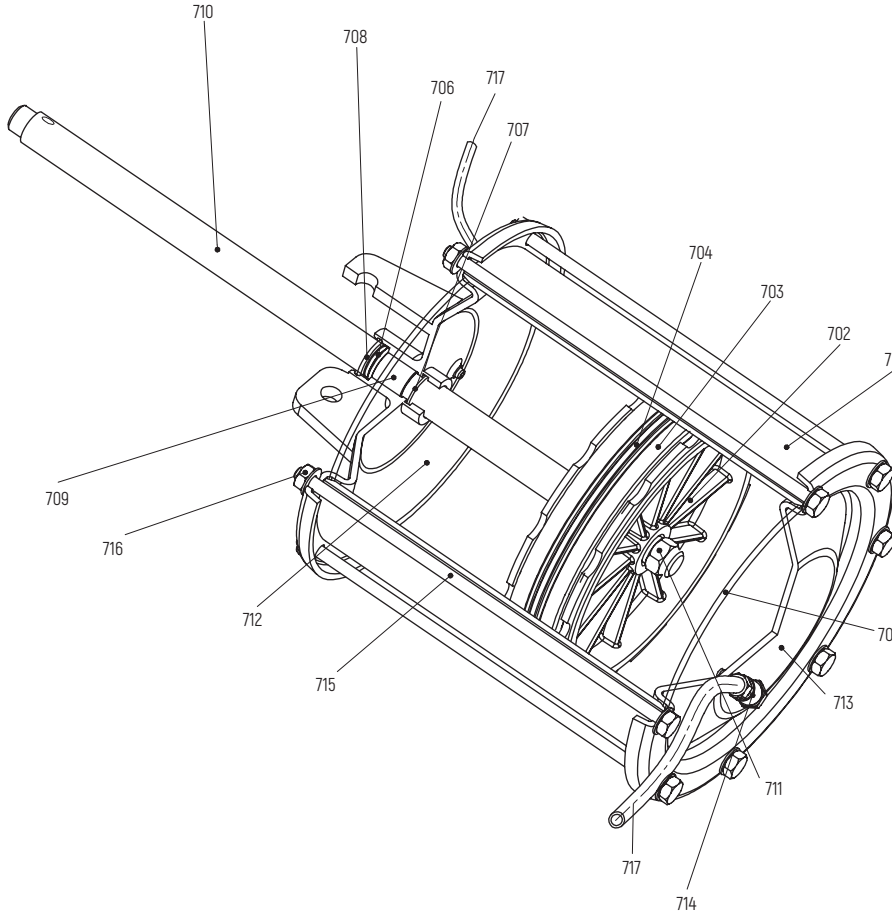

Drawing No.	Sata No.	Specification name	Quantity
701	PAE1021-701	Large cylinder barrel	1
702	PAE1021-702	Piston	1
703	PAE1021-703	V-ring	2
704	PAE1021-704	Piston guide ring	1
705	PAE1021-705	Sealing ring Ø182×2.65	2
706	PAE1021-706	Skeleton dust ring	1
707	PAE1021-707	Sealing ring Ø19×2.65	1
708	PAE1021-708	Φ30-hole clamp spring	1
709	PAE1021-709	Self-lubricating composite bearing	1
710	PAE1021-710	Piston rod	1
711	PAE1021-711	Hexagon heat nut M18*1.5*9 mm	1
712	PAE1021-712	Top cylinder head	1
713	PAE1021-713	Lower cylinder head	1
714	PAE1021-324B	With rotating quick-screw elbow 1/8-Φ8*5	2
715	PAE1021-715	Hexagon head bolt M8*230 mm	8
716	PAE1021-716	Non-slip locking nut M8	8
717	PAE1021-717	Air pipe Φ8*900 mm	2

6 380 V motor part:

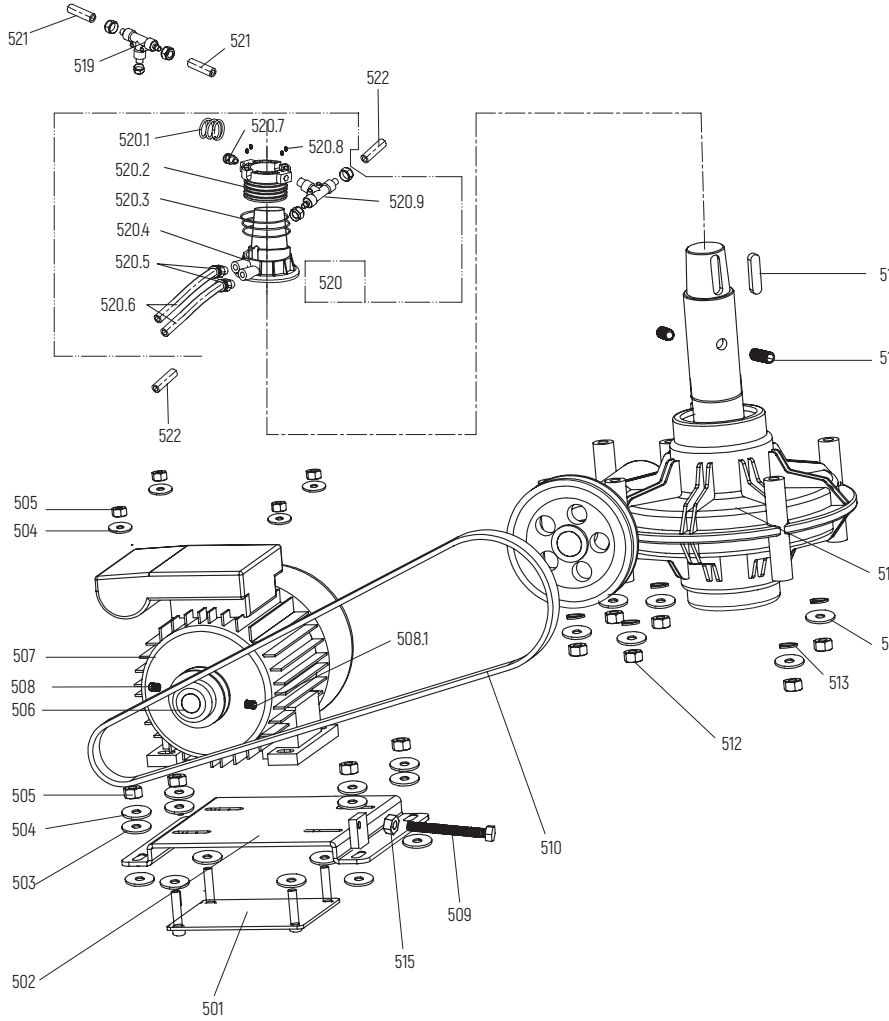

Drawing No.	Sata No.	Specification name	Quantity
501	PAE1021-501	Assembly welding of motor support plate	1
502	PAE1021-11	Assembly welding of motor mounting plate	1
503	PAE1021-503	Motor rubber pad	8
504	PAE1021-114	Flat gasket Φ8*17	8
505	PAE2021-126	Nut M8	9
506	PAE1021-506	Belt pulley	1
507	PAE1021-507	Motor 50 Hz/220V	1
508	PAE1021-508	Hexagon socket male end top thread M8*16	1
508.1	PAE1021-508A	Hexagon socket female end screw M8*12	1
509	PAE1021-509	Hexagon head bolt M8*70	1
510	PAE1021-510	Wedge belt 7P-440J	1
511	PAE1021-511	Worm gearbox assembly	1
512	PAE1021-512	Nut M10	6
513	PAE1021-513	Spring washer Φ10	6
514	PAE1021-514	Flat washer Φ10*20*2	6
515	PAE2021-126	Nut M8	1
516	PAE1021-516	220 V motor rubber pad	8
517	PAE1021-517	Hexagon socket female end set screw M10*35	2
518	PAE1021-518	Reducer A-type flat key 10*40	1
519	PAE1021-519	Quick-screw tee 3*Φ8*5	1
520	PAE1021-520	Rotary distribution valve assembly	1
520.1	PAE1021-34B	Spring pipe UCΦ8*5-5	1
520.2	PAE1021-520B	Distribution valve core	1
520.3	PAE1021-520C	O-ring 61.5*3.55	3
520.4	PAE1021-520D	Distribution valve sleeve	1
520.5	PAE1021-520E	Quick plug direct connection 1/8-Φ8	2
520.6	PAE1021-520F	Air pipe 8*1000	2
520.7	PAE1021-324C	Quick-screw direct connection 1/8-Φ8*5	1
520.8	PAE1021-520H	Hexagon socket female end set screw 4*6	4
520.9	PAE1021-520I	Quick-screw tee 1/8-2*Φ8*5	1
521	PAE1021-521	Air pipe Φ8*60mm	2
522	PAE1021-522	Air pipe Φ8*500mm	2

7 3380V motor part:

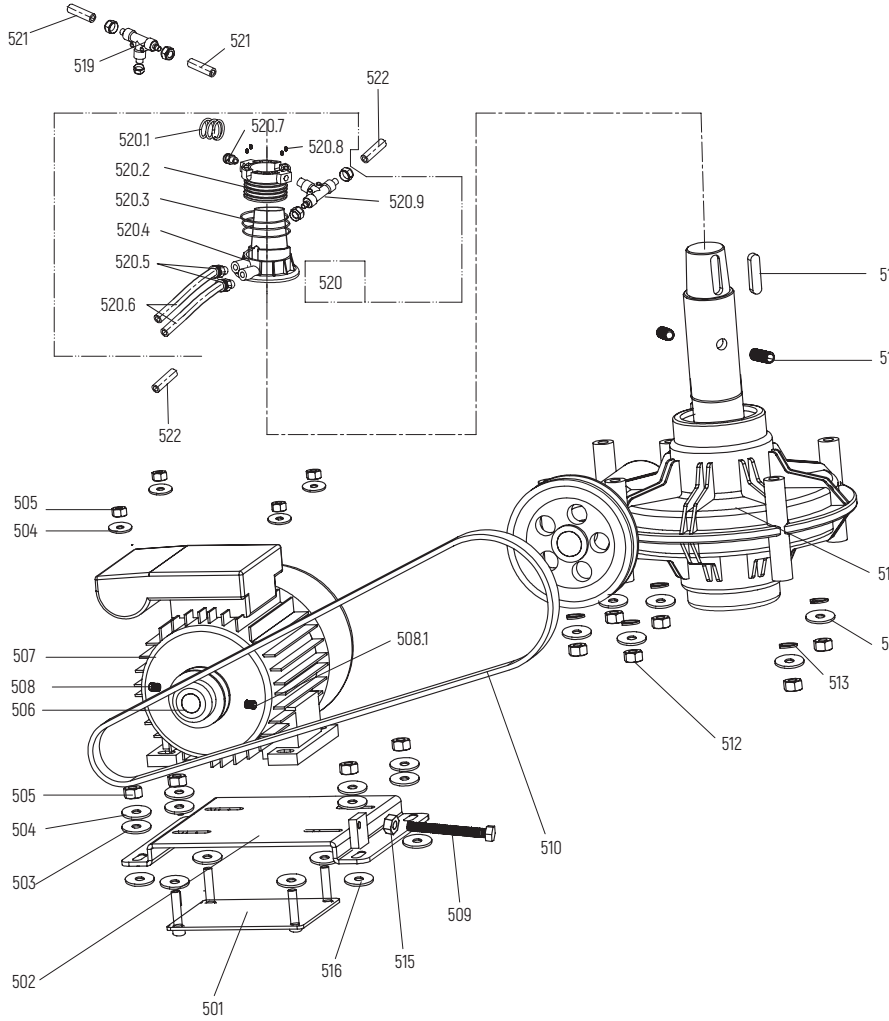

Drawing No.	Sata No.	Specification name	Quantity
501	PAE1021-501	Assembly welding of motor support plate	1
502	PAE1021-11	Assembly welding of motor mounting plate	1
503	PAE1021-503	Motor rubber pad	8
504	PAE1021-114	Flat gasket Φ8*17	8
505	PAE2021-126	Nut M8	9
506	PAE1021-506	Belt pulley	1
507	PAE1021-507	Motor 50 Hz/220V	1
508	PAE1021-508	Hexagon socket male end top thread M8*16	1
508.1	PAE1021-508A	Hexagon socket female end screw M8*12	1
509	PAE1021-509	Hexagon head bolt M8*70	1
510	PAE1021-510	Wedge belt 7P-440J	1
511	PAE1021-511	Worm gearbox assembly	1
512	PAE1021-512	Nut M10	6
513	PAE1021-513	Spring washer Φ10	6
514	PAE1021-514	Flat washer Φ10*20*2	6
515	PAE2021-126	Nut M8	1
516	PAE1021-516	220 V motor rubber pad	8
517	PAE1021-517	Hexagon socket female end set screw M10*35	2
518	PAE1021-518	Reducer A-type flat key 10*40	1
519	PAE1021-519	Quick-screw tee 3*Φ8*5	1
520	PAE1021-520	Rotary distribution valve assembly	1
520.1	PAE1021-34B	Spring pipe UCΦ8*5-5	1
520.2	PAE1021-520B	Distribution valve core	1
520.3	PAE1021-520C	O-ring 61.5*3.55	3
520.4	PAE1021-520D	Distribution valve sleeve	1
520.5	PAE1021-520E	Quick plug direct connection 1/8-Φ8	2
520.6	PAE1021-520F	Air pipe 8*1000	2
520.7	PAE1021-324C	Quick-screw direct connection 1/8-Φ8*5	1
520.8	PAE1021-520H	Hexagon socket female end set screw 4*6	4
520.9	PAE1021-520I	Quick-screw tee 1/8-2*Φ8*5	1
521	PAE1021-521	Air pipe Φ8*60mm	2
522	PAE1021-522	Air pipe Φ8*500mm	2

8 Pedal assembly:

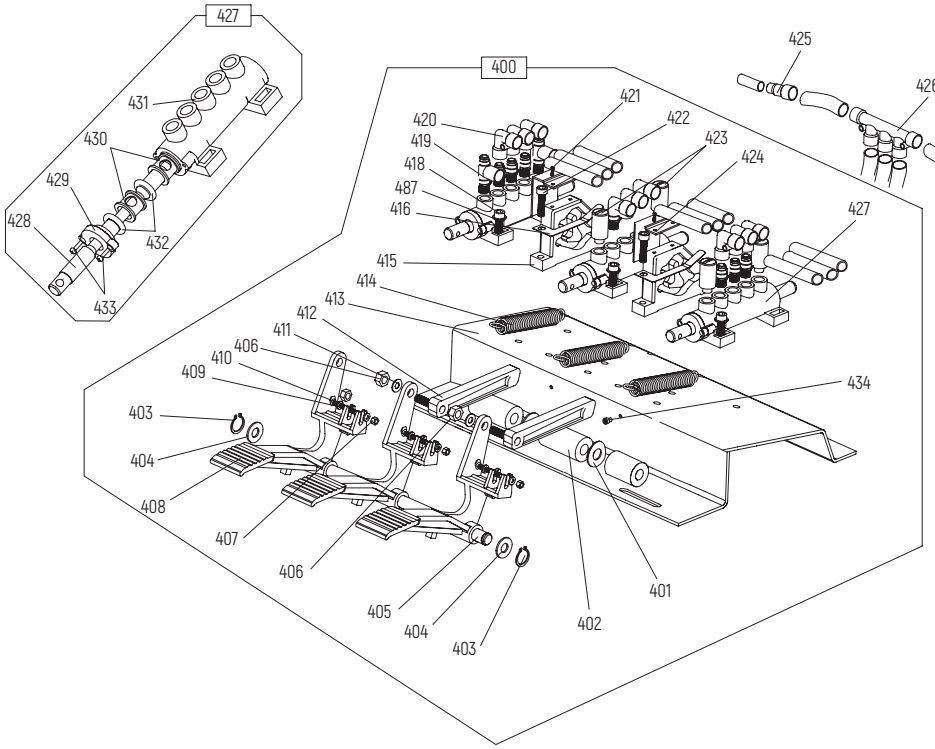

Drawing No.	Sata No.	Specification name	Quantity
400	PAE1022H-400	Three-pedal assembly	1
401	PAE1021-403	Flat washer Φ12*24*1.5	2
402	PAE1021-437	Shaft sleeve	1
403	PAE1021-322	Clamp spring for axle Φ12	2
404	PAE1021-316	Flat washer Φ12*24*2	9
405	PAE1021-404	Axle Φ12*282	1
406	PAE1021-716	Self-locking nut M8	2
407	PAE1021-438	Self-locking nut M4	3
408	PAE1021-407	Large pedal	3
409	PAE1021-439	Cross recessed countersunk head screw M4*35	3
410	PAE1021-440	Flat washer Φ4	3
411	PAE1021-114	Flat gasket Φ8*17	2
412	PAE1021-413	Cam connecting rod	2
413	PAE1022-413	Pedal bracket assembly welding	1
414	PAE1021-435	Pedal tension spring	3
415	PAE1021-420	Cam body	2
416	PAE1021-421	Cam spring piece	2
417	PAE2021-311	Flat washer Φ6*12*1.5	14
418	PAE1021-416	Hexagon socket round head bolt M6*25	11
419	PAE1022-419	Quick-plug regulating valve 1/8-6	2
420	PAE1022-420	Quick-plug elbow 1/8	9
421	PAE1021-418	Cross recessed cup head tapping screw 3*10	4
422	PAE1021-416	Hexagon socket round head bolt M6*25	4
423	PAE1021-422	Muffler 1/8	4
424	PAE1021-419	Cam cover	2
425	PAE1022-425	Quick-plug direct connection Φ6 to Φ8	1
426	PAE1022-426	Quick-plug five-way valve 5*Φ8	1
427	PAE1022-427	Five-way valve body assembly	3
428	PAE1022-428	Five-way valve rod 12 mm	3
429	PAE1021-429	Five-way valve cover	3
430	PAE1021-430	Five-way valve spacer	15
431	PAE1021-431	Five-way valve body	3
432	PAE1021-432	O-ring 12*20*4	18
433	PAE1021-418	Cross recessed cup head tapping screw 3*10	6
434	PAE1021-434	Hexagon socket round head bolt M5*10	1

9 Single pedal:

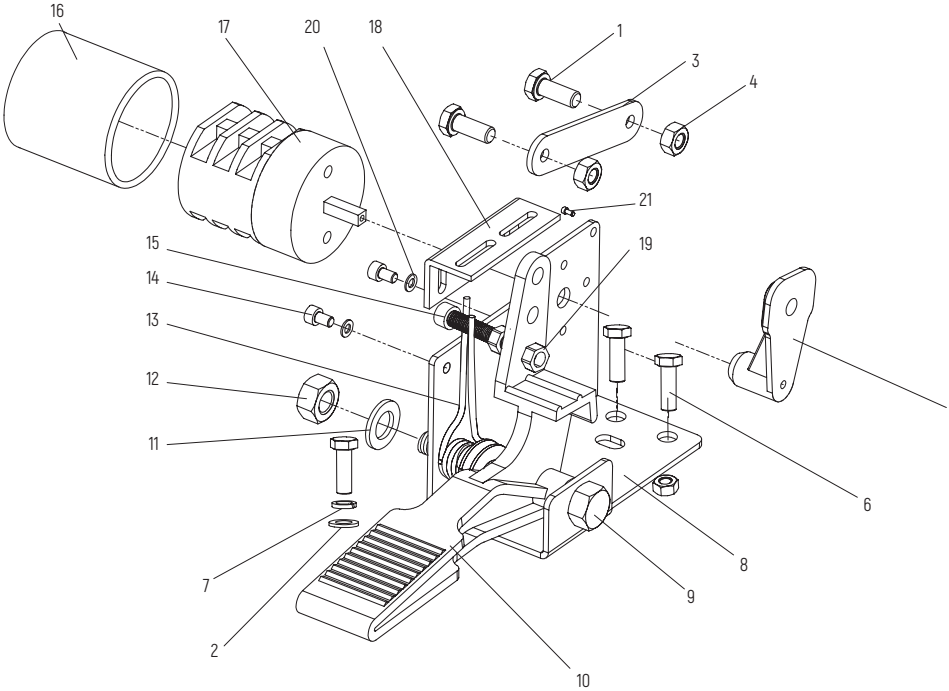

Drawing No.	Sata No.	Specification name	Quantity
1	PAE1021-414	Hexagon socket countersunk head bolt M8*20	2
2	PAE1021-110	Flat washer Φ8*24*2	1
3	PAE1022-3	Pull rod	1
4	PAE1021-716	Self-locking nut M8	4
5	PAE1021-417	Switch support	1
6	PAE1021-108	Hexagon head bolt M8*20	3
7	PAE1021-113	Spring washer Φ8	1
8	PAE1022-8	Single pedal support plate	1
9	PAE1022-9	Hexagon head bolt M12*85	4
10	PAE1021-407	Large pedal	1
11	PAE1021-316	Flat washer Φ12*24*2	4
12	PAE1022-12	Self-locking nut M12	2
13	PAE1021-409	Pedal torsion spring = Φ3.5*20.4*70	2
14	PAE1021-24	Hexagon socket head cap screw M6*10	2
15	PAE1021-509	Hexagon socket head cap screw M8*30	1
16	PAE1021-443	Switch rubber sleeve	1
17	PAE1021-425	Change-over switch	1
18	PAE1022-18	Torsion spring support	1
19	PAE2021-126	Nut M8	1
20	PAE2021-311	Flat washer Φ6*12*1.5	2
21	PAE2021-118	Cross round head bolt M4*10	1

10 Shovel arm assembly:

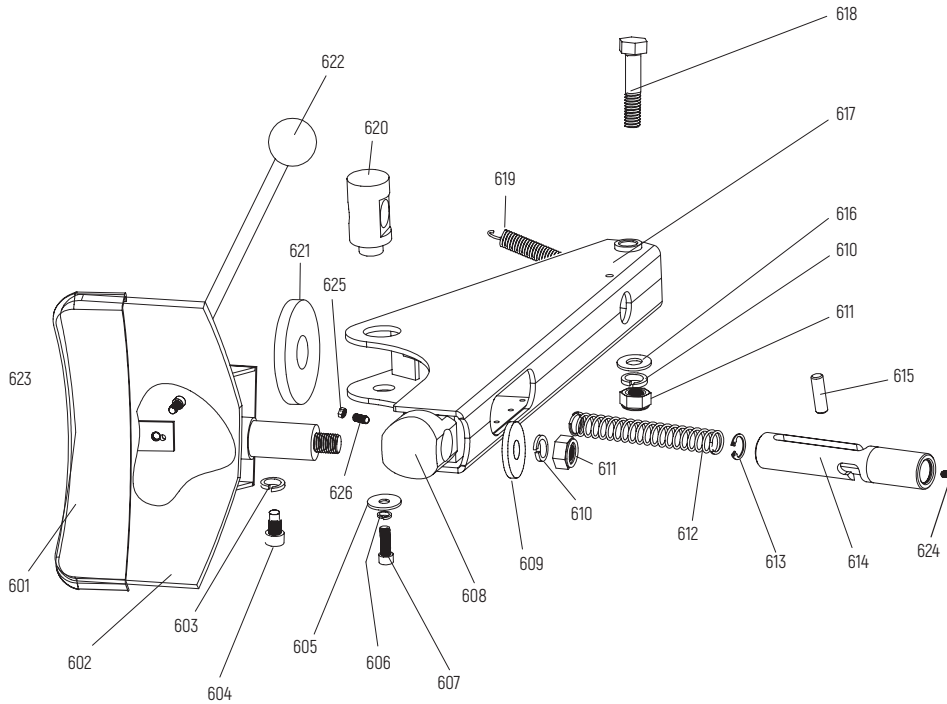

Drawing No.	Sata No.	Specification name	Quantity
601	PAE1021-601	Tire pressing shovel sheath	1
602	PAE1021-602	Tire pressing shovel	1
603	PAE1021-603	Spring washer Φ14	2
604	PAE1021-604	Locating pin	2
605	PAE1021-605	Flat washer Φ8*30*2	1
606	PAE1021-113	Spring washer Φ8	1
607	PAE1021-108	Hexagon head bolt M8*20	1
608	PAE1021-608	Tire pressing shovel crank shaft	1
609	PAE1021-131	Large washer of workbench	1
610	PAE1021-303	Spring washer Φ16	2
611	PAE1021-132	Self-locking nut M16	2
612	PAE1021-612	Adjustable sleeve pressure spring Φ1.5*19.5*125	1
613	PAE1021-613	Hole spring Φ20	1
614	PAE1021-614	Adjusting sleeve of large cylinder piston rod	1
615	PAE1021-615	Pin shaft of large cylinder piston rod 10*33	1
616	PAE1021-616	Flat washer Φ16*30*2	1
617	PAE1021-617	Shovel arm	1
618	PAE1021-618	Hexagon head bolt M16*100	1
619	PAE1021-619	Shovel arm pull spring Φ2.5*20*7.5	1
620	PAE1021-620	Large cylinder pull rod sleeve	1
621	PAE1021-621	Shovel arm rubber pad	1
622	PAE1021-622	Black ball handle M16*50	1
623	PAE1021-24	Hexagon socket head cap screw M6*10	1
624	PAE2021-405	Hexagon socket head cap screw M6*16	1
625	PAE1021-625	Nut M10	1
626	PAE1021-626	Hexagon socket female end set screw M10*20	1

11 Right auxiliary arm:

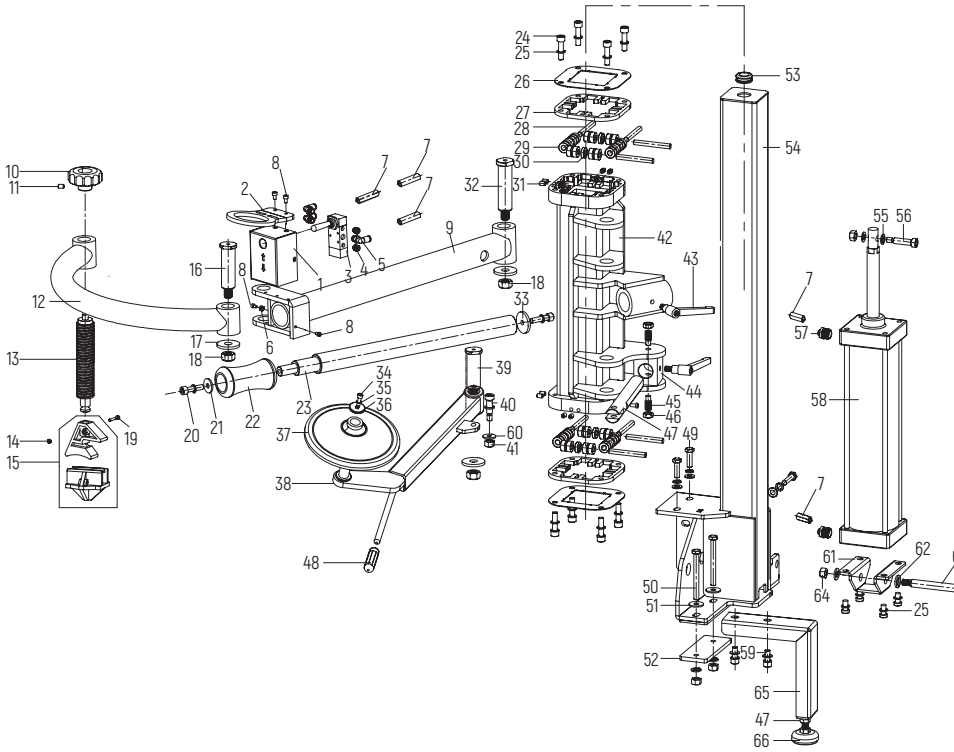

Drawing No.	Sata No.	Specification name	Quantity	Drawing No.	Sata No.	Specification name	Quantity
1	PAE1022-H1	Push valve protective box	1	34	PAE1021-308	Hexagon socket head bolt M8*20	1
2	PAE1022-H2	Handle	1	35	PAE1021-113	Spring washer Φ8	1
3	PAE1022-H3	Push valve	1	36	PAE1022-H36	Big flat washer 8	1
4	PAE1021-422	Muffler 1/8	2	37	PAE1022-H37	Tire supporting tray	1
5	PAE1022-221	Quick-plug elbow 1/8-Φ6	3	38	PAE1022-H38	Right tire supporting arm	1
6	PAE2021-121	Nut M6	1	39	PAE1022-H39	Supporting arm pin	1
7	PAE1022-H7	Air pipe 6 × 3,500 mm	3	40	PAE1022-H40	Shoulder screw M12*30	1
8	PAE1021-24	Hexagon socket head bolt M6*10	5	41	PAE1022-208	Self-locking nut M10	3
9	PAE1022-H9	Right transverse arm	1	42	PAE1022-H42	Lifting sliding sleeve	1

Drawing No.	Sata No.	Specification name	Quantity	Drawing No.	Sata No.	Specification name	Quantity
10	PAE1022-H10	Plum handle 12*80	1	43	PAE1022-H43	7-shaped locking handle	2
11	PAE1022-H11	Hexagon socket female end set screw 6*6	1	44	PAE1022-H44	Turning block	1
12	PAE1022-H12	Bent arm	1	45	PAE1022-H45	Locating pin for locking plate	2
13	PAE1022-H13	Doublet screw rod	1	46	PAE1021-107	Nut M12	3
14	PAE1022-H14	Self-locking nut M6	1	47	PAE1022-H47	Tire supporting locking rod	1
15	PAE1022-H15	Tire pressing head	1	48	PAE1022-H48	Shovel arm handle sleeve	1
16	PAE1022-H16	Transverse arm pin	1	49	PAE1022-H49	Hexagon head bolt M10*40	4
17	PAE1021-131	Large washer of workbench	3	50	PAE1022-H50	Hexagon head bolt M10*120	2
18	PAE1021-132	Self-locking nut M16	3	51	PAE2021-212	Thickened flat washer 10*25*4	8
19	PAE2021-313	Hexagon socket head bolt M6*35	1	52	PAE1022-H52	Column retaining clamp	1
20	PAE1021-127	Hexagon head bolt M10*25	2	53	PAE1022-H53	Protective ring Φ28-5	3
21	PAE2021-108	Flat washer Φ10*30*2	1	54	PAE1022-H54	Column component	1
22	PAE1022-H22	Tire pressing roller	1	55	PAE1021-317	Spring washer Φ12	1
23	PAE1022-H23	Rod pressing shaft	1	56	PAE1022-H56	Shoulder screw M12*40	1
24	PAE1022-27	Hexagon head bolt M10*30	8	57	PAE1022-H57	Quick plug direct connection 1/2-Φ6	2
25	PAE2021-208	Spring washer Φ10	16	58	PAE1022-H58	Standard cylinder (without base) Φ100 x 350	1
26	PAE1022-H26	Roller cover plate	2	59	PAE1021-127	Hexagon head bolt M10*25	2
27	PAE1022-H27	Roller plywood	2	60	PAE2021-209	Flat washer Φ10*20*2	1
28	PAE1022-216	Ball bearing steel cylindrical pin (M10*80)	8	61	PAE1022-H61	Cylinder base	1
29	PAE1022-H29	Needle bearing with inner ring NA6900	16	62	PAE1021-303	Spring washer Φ16	1
30	PAE1022-218	Deep groove ball bearing 6900Z	8	63	PAE1022-H63	Shoulder screw M16*110	1
31	PAE1021-508A	Hexagon socket female end set screw 8*12	8	64	PAE1022-202	Self-locking nut M12	1
32	PAE1022-H32	Transverse arm pin	1	65	PAE1022-H65	Support rod	1
33	PAE1022-206	Locking washer	1	66	PAE1022-H66	Foot pad with rubber vibration-dampening feet	1

适用型号 / Model: **AE1022H/AE1022H-3**

版本号 / Version No: **V_AE_1022HX_1209**

世达汽车科技（上海）有限公司
SATA Automotive Technology (Shanghai) Co., Ltd
客户服务：上海市嘉定区南翔镇静唐路 988 号 5-12 幢
Customer service: Building 5-12, No. 988, Jingtang Road, Nanxiang Town, Jiading District, Shanghai
邮编 / Post: 201802 电话 / Tel.: (86 21) 6061 1919 传真 / Fax: (86 21) 6061 1918